NOTE: The document identifier and heading has been changed on this page to reflect that this is a performance specification. There are no other changes to this document. The document identifier on subsequent pages has not been changed, but will be changed the next time this document is revised.

METRIC
MIL-PRF-24667A(NAVY)
14 August 1992
SUPERSEDING
MIL-C-24667(NAVY)
11 September 1986

PERFORMANCE SPECIFICATION

# COATING SYSTEM, NON-SKID, FOR ROLL OR SPRAY APPLICATION (METRIC)

This specification is approved for use by the Department of the Navy and is available for use by all Departments and Agencies of the Department of Defense.

## 1. SCOPE

1.1 Scope. This specification covers non-skid coating systems for application to weather decks, flight decks, and hangar decks of air capable amphibious aviation and aviation ships. Coatings are applied to steel, aluminum, reinforced plastic and wood surfaces by spraying, rolling, or trowelling.

1.2 Classification. The coating systems covered by this specification shall be furnished in the following types and compositions as specified (see 6.2).

1.2.1 Types. The types of non-skids shall consist of the following:

Type I - High durability, rollable deck coating.
Type II - Standard durability, rollable or trowell deck coating.
Type III - Standard durability, rollable resilient deck coating (for use on exterior wooden decks or where flexibility is required and where increased weight is not a factor).
Type IV - Standard durability, sprayable deck coating.

Beneficial comments (recommendations, additions, deletions) and any pertinent data which may be of use in improving this document should be addressed to: Commander, Naval Sea Systems Command, SEA 55Z3, Department of the Navy, 2531 National Center Bldg 3, Washington, DC 20362-5160 by using the self-addressed Standardization Document Improvement Proposal (DD Form 1426) appearing at the end of this document or by letter.

AMSC N/A FSC 8010
DISTRIBUTION STATEMENT A. Approved for public release; distribution is unlimited.

1.2.2 Compositions. The composition of non-skid shall be designated by "G" (General Use) or "L" (Limited Use) as follows:

Composition G - General use abrasive deck coating (Types I, II, III and IV).

Composition L - Limited use aircraft carrier landing and run-out area deck coating which is not abrasive to the steel arresting cable (composition L shall be for types I and II only, does not apply to types III and IV).

2. APPLICABLE DOCUMENTS

2.1 Government documents.

2.1.1 Specifications, standards, and handbooks. The following specifications, standards, and handbooks form a part of this document to the extent specified herein. Unless otherwise specified, the issues of these documents are those listed in the issue of the Department of Defense Index of Specifications and Standards (DODISS) and supplement thereto, cited in the solicitation (see 6.2).

SPECIFICATIONS

FEDERAL

O-E-760 - Ethyl Alcohol (Ethanol); Denatured Alcohol; Proprietary Solvents and Special Industrial Solvents.
PPP-C-96 - Can, Metal, 28 Gage and Lighter.
PPP-F-320 - Fiberboard, Corrugated and Solid, Sheet Stock (Container Grade) and Cut Shapes.
PPP-P-704 - Pails, Metal: (Shipping, Steel, 1 through 12 gallons).

MILITARY

MIL-T-5624 - Turbine Fuel, Aviation, Grades JP-4 and JP-5/JP-8 ST.
MIL-A-8243 - Anti-Icing and Deicing-Defrosting Fluids.
MIL-C-9084 - Cloth, Glass, Finished for Resin Laminates.
MIL-D-16791 - Detergents, General Purpose (Liquid, Non-ionic).
MIL-L-19140 - Lumber and Plywood, Fire Retardant Treated.
MIL-S-22698 - Steel Plate, Shapes and Bars, Weldable Ordinary Strength and Higher Strength, Structural.
MIL-L-23699 - Lubricating Oil, Aircraft Turbine Engine, Synthetic Base.
MIL-F-24385 - Fire Extinguishing Agent, Aqueous Film-Forming Foam (AFFF) Liquid Concentrate for Fresh and Sea Water.
DOD-G-24508 - Grease, High Performance, Multi-Purpose (Metric).
MIL-I-45208 - Inspection System Requirements.
MIL-H-83282 - Hydraulic Fluid, Fire Resistant, Synthetic Hydrocarbon Base, Aircraft, Metric, NATO Code Number H-537.

STANDARDS

FEDERAL

FED-STD-141 - Paint, Varnish, Lacquer, and Related Materials: Methods for Sampling and Testing.

FED-STD-313 - Material Safety Data, Transportation Data and Disposal Data for Hazardous Materials Furnished to Government Activities.

FED-STD-595 - Colors Used in Government Procurement.

MILITARY

MIL-STD-129 - Marking for Shipment and Storage.

MIL-STD-1623 - Fire Performance and Approved Specifications for Interior Finish Materials and Furnishings.

(Unless otherwise indicated, copies of federal and military specifications, standards, and handbooks are available from the Standardization Documents Order Desk, BLDG. 4D, 700 Robbins Avenue, Philadelphia, PA 19111-5094.)

2.1.2 Other Government documents, drawings, and publications. The following other Government documents, drawings, and publications form a part of this document to the extent specified herein. Unless otherwise specified, the issues are those cited in the solicitation.

U.S. ENVIRONMENTAL PROTECTION AGENCY (EPA)

40 Code of Federal Regulation (CFR) Ch. 1, Subpart C - Characteristics of Hazardous Waste, Part 261.24 Toxicity Characteristics, Table 1, Maximum Concentration of Contaminants for the Toxicity Characteristic.

40 Code of Federal Regulation (CFR) Ch. 1, Part 261 Appendix II - Method 1311 Toxicity Characteristic Leaching Procedure (TCLP).

40 Code of Federal Regulations (CFR) Ch. 1, Part 60, Appendix A, Method 24 Determination of Volatile Matter Content, Water Content, Density, Volume Solids and Weight Solids of Surface Coatings.

OCCUPATIONAL SAFETY AND HEALTH ADMINISTRATION (OSHA)

Occupational Health and Safety Administration, 29 CFR Parts 1910, 1915, 1917, 1918, 1926 and 1928 - Hazard Communication Act, Final Rule.

(Application for copies of other Government documents are available from Superintendent of Documents, U.S. Government Printing Office, Washington, DC 20402.)

STATE OF CALIFORNIA DEPARTMENT OF HEALTH SERVICES

California Administrative Code Title 22, Division 4, Chapter 30, Minimum Standards for Management of Hazardous and Extremely Hazardous Waste, Section 66699, Persistent and Bioaccumulative Toxic Substance and Section 66700 Waste Extraction Test, Pg. 679-681 (Register 90, Nos. 38-41; 10-12-90).

(Application for copies should be addressed to the Hazardous Material Laboratory, State of California, Dept of Health Services, 2151 Berkeley Way, Berkeley, CA 94704.)

2.2 Non-Government publications. The following document(s) form a part of this document to the extent specified herein. Unless otherwise specified, the issues of the documents which are DOD adopted are those listed in the issue of the DODISS cited in the solicitation. Unless otherwise specified, the issues of documents not listed in the DODISS are the issues of the documents cited in the solicitation (see 6.2).

AMERICAN SOCIETY FOR TESTING AND MATERIALS (ASTM)

A 229 - Specification for Steel Wire, Oil-Tempered for Mechanical Springs.
B 117 - Standard Method of Salt Spray (Fog) Testing.
C 136 - Standard Method for Sieve Analysis of Fine and Coarse Aggregates. (DOD adopted)
D 523 - Standard Test Method for Specular Gloss. (DOD adopted)
D 659 - Standard Method of Evaluating Degree of Chalking of Exterior Paints.
D 660 - Standard Method of Evaluating Degree of Checking of Exterior Paints.
D 661 - Standard Method of Evaluating Degree of Cracking of Exterior Paints.
D 1141 - Specification for Substitute Ocean Water.
D 1652 - Standard Test for Epoxy Content of Epoxy Resins.
D 1957 - Standard Test Method for Hydroxyl Value of Fatty Oils and Acids.
D 2073 - Standard Test Methods for Total, Primary, Secondary, and Tertiary Amine Values of Fatty Amines, Amidoamines, and Diamines by Referee Potentiometric Method.
D 2244 - Standard Test Method for Calculation of Color Differences From Instrumentally Measured Color Coordinates.
D 2572 - Standard Test Method for Isocyanate Groups in Urethane Materials or Prepolymers. (DOD adopted)
D 3278 - Standard Test Methods for Flash Point of Liquids by Setaflash Closed-Cup Apparatus.
D 3951 - Standard Practice for Commercial Packaging.
D 4214 - Standard Test Methods for Evaluating the Degree of Chalking of Exterior Paint Films.
D 4541 - Pull-Off Strength of Coatings Using Portable Adhesion Testers.
F 137 - Standard Test Method for Flexibility of Flooring Materials.

ASTM (Continued)

F 718 - Standard Shipbuilders and Marine Paints and Coatings Product/Procedure Data Sheet. (DOD adopted)

G 53 - Standard Practice for Operating Light- and Water-Exposure Apparatus (Fluorescent UV-Condensation Type) for Exposure of Non Metallic Materials.

(Application for copies should be addressed to the American Society for Testing and Materials, 1916 Race Street, Philadelphia, PA 19103-1137.)

AMERICAN WOOD PRESERVES ASSOCIATION STANDARD

P5-85 - C-2 Chromated Copper Arsenate Preservative.

(Application for copies should be addressed to American Wood Preserves Association Standard, P.O. Box 849, Stevernville, MD 21666.)

STEEL STRUCTURES PAINTING COUNCIL (SSPC)

SP5 - Specification for White Metal Blast Cleaning.

(Application for copies should be addressed to the Steel Structures Painting Council, 4400 Fifth Avenue, Pittsburgh, PA 15213.)

United Nations:

UN - Performance Oriented Packaging.

(Application for copies should be addressed to: Labelmaster Master, 5724 North Pulaski Road, Chicago, IL 60646.)

U.S. National Committee CIE

(Application for copies should be addressed to: International Commission on Illumination) Publications Office, Philips Lighting Co., Philips Square, CN6800, Somerset, NJ 08873-6800.)

(Non-Government standards and other publications are normally available from the organizations that prepare or distribute the documents. These documents also may be available in or through libraries or other informational services.)

## 3. REQUIREMENTS

3.1 Qualification. Coating systems furnished under this specification shall be those systems which are approved by the qualifying activity for listing on the applicable qualified products list (QPL) at the time of award of the contract (see 4.3 and 6.4).

3.1.1 Identification characteristics. Values for identification characteristics shall be provided by individual contractors for characteristics as specified in table I. The values shall be established for each individual coating which comprises the coating system prior to qualification testing. The purpose of these values is to serve as a basis for determining that the material being offered is essentially the same as that which was approved under qualification testing. Quality conformance inspections shall be as specified (see 4.4).

3.2 Composition. The total non-skid coating system shall consist of a non-skid topcoat, anti-corrosive primer (for metal decks only), or primer (for wood and fiberglass decks) any needed intermediate coatings and color topping coatings. The composition of each individual coating of the non-skid coating system is the manufacturer's responsibility subject only to the limitations of 3.24. Each individual coating of the non-skid coating system may be provided as one or two parts. Types I, II, and III non-skid coatings and type III underlayment intermediate coatings shall be formulated for application by roller or trowel. Type IV coatings shall be formulated for application by spray only.

3.3 Abrasion of cable (composition L only). When tested in accordance with 4.6.1, the composition L non-skid coating system shall produce a maximum average wear of the arresting cable test wire of 0.025 millimeters (mm) (1.0 mil; 0.001 inch (in)).

TABLE I. Identification characteristics.

| Characteristic | Two-part coating | | Aggregate | One-part coating or combined mixture |
|---|---|---|---|---|
| | Base material, component A | Curing agent, component B | | |
| Chemical nature (percent [%] of each material which comprises 2 % or more of the coating) | X | X | | X |
| Percent (%) resin solids by mass | X | X | | X |
| Percent (%) pigment by mass | X | X | | X |
| Percent (%) volatile matter by mass | | | | X |
| Percent (%) aggregate by mass | X | | | X |
| Aggregate size distribution (ASTM C 136) | | | X | |
| Aggregate composition (% of each material which comprises 10% or more of the aggregate) | | | X | |
| Mass (kilograms per liter, [kg/L], pounds per gallon [lbs/gal]) | X | X | | X |
| Epoxy content 1/ (ASTM D 1652) | X | | | |
| Active amine hydrogen content 2/ (ASTM D 2073) | | X | | |

See footnotes at end of table.

TABLE I. Identification characteristics - Continued.

| Characteristic | Two-part coating | | Aggregate | One-part coating or combined mixture |
|---|---|---|---|---|
| | Base material, component A | Curing agent, component B | | |
| Pigment analysis | X | X | | 3/ |
| Infrared spectrum of resin | X | X | | 3/ |
| Volatile organic content (VOC) (grams per liter [g/L] coating less water) | | | | X |
| 60° specular gloss 4/ (ASTM D 523) | | | | X |

1/ Isocyanate content, ASTM D 2572, if applicable.
2/ Hydroxyl content, ASTM D 1957, if applicable.
3/ One-part coating only; these analyses are done on the individual components of two-part coatings.
4/ The gloss value shall be the average of 10 readings on a panel prepared by drawing down a 50 mil (0.050 in) film of the topcoat on a primed panel. Films of aggregate containing coatings shall be drawn down after aggregate has been sieved out.

3.4 Appearance of the dried coating. When tested in accordance with 4.6.2, the primer and intermediate coats, if any, shall dry to a smooth, uniform film, free of spotting, streaking, mud cracking, wrinkling, cratering or blistering. When non-skid coatings are applied by napless roller, the non-skid topcoat shall have a textured appearance of roughly parallel rows of raised coating, forming peaks or ridges. When the types I, II, and III non-skid coatings are applied by napped roller or trowel, the aggregate shall be uniformly distributed, and shall present a coarse, rough appearance. The non-skid coating shall have sufficient sag resistance to retain the raised, textured appearance in the dried coating. When the type IV material is applied by spray, the topcoat shall present a uniformly coarse, rough appearance over the entire surface. The aggregate shall be distributed uniformly over the surface, and shall protrude prominently above the resin matrix. A sample of the non-skid topcoat shall also be included with each shipment of material covered by this specification (see 5.8).

3.5 Application properties. When tested in accordance with 4.6.3, separate samples of each individual coating of the non-skid coating system which have been conditioned and mixed at 10, 24, and 32 degrees Celsius (°C) (50, 75 and 90 degrees Fahrenheit (°F)), shall mix easily with no curdling or separation of ingredients. When the types I, II, and III non-skid topcoat coatings are applied by roller or trowel to metal surfaces at 10, 24, and 49°C (50, 75 and 120°F), respectively, there shall be no excess drag or accumulation of coating on the roller, and no excessive spattering of the coating. When type IV is applied by

spray to metal surfaces at 10, 24, and 49°C (50, 75, and 120°F), respectively, the material shall flow evenly without running, dripping, spattering or cobwebbing. The appearance of the coating systems shall meet the applicable requirements specified in 3.4.

3.6 Coefficient of friction. The coefficient of static friction of the coating system, when tested in accordance with 4.6.4, shall be determined on topcoats which have been subjected to 50 cycles of wear (conditioning of surface) and on topcoats which have completed the wear test as specified in 4.6.17. The test shall be performed on dry, wet and oily substrates. When tested in accordance with 4.6.4, the minimum values for each type shall be in accordance with table II.

TABLE II. Coefficient of friction, minimum.

| | Dry | Wet | Oily |
|---|---|---|---|
| Initial: | | | |
| Type I | 0.95 | 0.90 | 0.80 |
| Types II, III and IV | 0.90 | 0.85 | 0.75 |
| After wear: | | | |
| Type I | 0.90 | 0.85 | 0.75 |
| Types II, III and IV | 0.85 | 0.75 | 0.65 |

3.7 Color. The non-skid topcoats and color toppings shall be supplied in one of the following colors from FED-STD-595, as specified (see 6.2): Red to match color 31136; yellow to match color 33538; olive drab to match color 34088; dark gray to match color 36076; haze gray to match color number 36270, ocean gray to match 36173; black to match color 37038; green to match 14062; and white to match color 37875. The color shall be characteristic of the pigments used and shall match the above FED-STD-595 number specified when tested as specified in 4.6.5.

3.7.1 Color deviation. The color deviation of the non-skid topcoat and color topping from an unopened, original container shall be obtained as specified in 4.6.5. The measured color deviation from FED-STD-595 color number specified, measured in CIE [Commission Internationale de l'Eclairage (International Commission on Illumination)] system units (CIELAB), shall not exceed: delta (Δ) E = 0.5 CIELAB units, Δ A = ± 0.3 CIELAB units, Δ B = ± 0.3 CIELAB units, and Δ L = ± 0.3 CIELAB Lab units.

3.8 Condition in container. When tested in accordance with 4.6.6, liquid one-part coatings, and individual components of two-part coatings, shall not show skinning, livering, curdling, or separation of ingredients, nor hard settling which cannot be dispersed to a uniform consistency by 15 minutes of agitation stirring. When tested in accordance with 4.6.5, the CIELAB color difference of the mixed non-skid topcoat and color topping shall meet the requirements of 3.7 and 3.7.1. After a standing period for 2 hours without further mixing, the CIELAB color difference of the non-skid topcoat and color topping shall be tested in accordance with 4.6.5. The CIELAB color difference measured for 2 hour old mixed non-skid and color topping shall not exceed 0.5 CIELAB units from the color values measured after stirring but before the 2 hour standing period.

3.9 Coverage.

3.9.1 Topcoats. When tested in accordance with 4.6.7, coverage shall be as follows:

(a) Type I non-skid topcoat shall cover not less than 0.49 square meters per liter ($m^2/L$) (20 square feet per gallon ($ft^2/gal$) nor more than 0.74 $m^2/L$ (30 $ft^2/gal$).
(b) Types II and III (rolled) non-skid topcoat shall cover not less than 0.61 $m^2/L$ (25 $ft^2/gal$) nor more than 0.86 $m^2/L$ (35 $ft^2/gal$).
(c) Types II and III (trowelled) non-skid topcoat shall cover not less than 0.49 $m^2/L$ (20 $ft^2/gal$) nor more than 0.54 $m^2/L$ (22 $ft^2/gal$).
(d) Type IV (sprayed) non-skid topcoat, shall cover no more than 1.5 $m^2/L$ (60 $ft^2/gal$).

3.9.2 Primers. When tested in accordance with 4.6.7, primers shall cover an abrasive blasted surface (with surface profile of 51 to 102 micro meters (2 to 4.5 mils)) to between 3.68 and 12.27 $m^2/L$ (150 and 500 $ft^2/gal$).

3.9.3 Intermediate coats (type III only). When tested in accordance with 4.6.7, intermediate coats shall cover not more than 0.54 $m^2/L$ (22 $ft^2/gal$).

3.10 Drying time. When tested in accordance with 4.6.8, the maximum drying times shall be as follows:

(a) The maximum drying time of the non-skid topcoat shall be 48 hours at 10°C (50°F), 24 hours at 24°C (75°F) and 16 hours at 49°C (120°F).
(b) The maximum drying time of the primer or intermediate coats shall be 24 hours at 10°C (50°F), 18 hours at 24°C (75°F), and 16 hours at 49°C (120°F).

In addition, the primer coat shall be allowed to dry for at least 36 hours (48 hrs max) at temperatures between 10°C (50°F) and 49°C (120°F) before application of the next coat. The intermediate coat (type II only) shall be allowed to dry for at least 36 hours (48 hrs max) at temperatures between 10°C (50°F) and 49°C (120°F) before application of the next coat.

3.11 Fire resistance. When tested in accordance with 4.6.9, the coating system shall be in accordance with the requirements of MIL-STD-1623.

3.12 Flash point. When tested in accordance with 4.6.10, the minimum flash point for each component of the non-skid system shall be 38°C (100°F) except color topping shall be 27°C (80°F).

3.13 Flexibility (type III only). When tested in accordance with 4.6.11, the type III coating system shall show no breaking, cracking or loss of adhesion at the bend. Failure within 12 mm (0.5 in) of the edge of the panel shall be ignored.

3.14 Immersion resistance. When tested in accordance with 4.6.12, the coating system shall show no softening, loss of adhesion, separation between coats of the system, discoloration, or other signs of deterioration.

3.15 Impact resistance. When tested in accordance with 4.6.13, the minimum impact resistance of each type of non-skid coating shall be in accordance with table III. Failure of any one of the four conditions tested in 4.6.13 to meet the requirements of table III constitutes failure of this test.

TABLE III. Impact resistance, minimum, percent.

| | No Treatment | 15 days Immersion |
|---|---|---|
| Type I (steel and reinforced plastic substrates) | 95 | 100 |
| Type II and IV (steel and reinforced plastic substrates) | 70 | 90 |
| Type III (steel, reinforced plastic, and douglas fir substrates) | 70 | 90 |

3.16 Pot life. When tested in accordance with 4.6.14, the minimum pot life values for each coating in the non-skid coating system (except type III intermediate coats) shall be in accordance with table IV.

TABLE IV. Minimum pot life, hours.

| | 10°C (50°F) | 24°C (75°F) | 32°C (90°F) |
|---|---|---|---|
| Type I | 3 | 2 | 1 |
| Types II III, & IV | 6 | 4 | 2 |

3.16.1 Pot life (type III intermediate coats). When tested in accordance with 4.6.14, the minimum pot life values for type III intermediate coats shall be in accordance with table V.

TABLE V. Minimum pot life, minutes.

| | 10°C (50°F) | 24°C (75°F) | 32°C (90°F) |
|---|---|---|---|
| Type III Intermediate Coats | 60 | 40 | 20 |

3.17 Resistance to accelerated aging by light and water. When tested in accordance with 4.6.15, the coating system shall:

(a) Show no loss of adhesion or separation between coats of the system when exposed to ultraviolet light and condensation of water.
(b) The topcoat shall show no cracking more than is indicated by a rating of 6 (ASTM D 661).
(c) The topcoat shall show no checking more than is indicated by a rating of 6 (ASTM D 660).
(d) The CIELAB color difference Δ E, Δ L, Δ a, and Δ b units, shall not exceed 1.0 CIELAB units from the original color values measure before testing (ASTM D 2244).

3.18 Resistance to accelerated corrosion. When tested in accordance with 4.6.16, the coating system shall show no loss of adhesion, separation between layers of the system, or corrosion of the steel substrate beyond a 9 mm (3/8 in) radius from the centers of the impact areas.

3.19 Resistance to wear. When tested in accordance with 4.6.17, the percent weight loss on wear of the coating system shall not exceed 10 percent for type I, or 40 percent for types II, III and IV.

3.20 Adhesion of the intermediate coat (type III only). When tested in accordance with 4.6.18, the minimum adhesion strength of the intermediate coat shall be 400 lbs/sq-inch.

3.21 Storage stability.

3.21.1 Long-term storage stability. When tested in accordance with 4.6.19.1, the liquid one-part coating, or components of two-part coatings which have been stored for 1 year in their original containers at room temperature (75°F Average room temperature) shall, when mixed in accordance with the directions specified in 3.25, produce a coating system which meets all the requirements of this specification except 3.26. When tested in accordance with 4.6.5, the CIELAB color difference of the mixed non-skid topcoat and color topping shall not exceed 0.5 CIELAB units form the original color values measured prior to the shelf life test. The mixed non-skid topcoat and color topping shall also meet the requirements of 3.17.

3.21.2 Accelerated storage stability. When tested in accordance with 4.6.19.2, each individual coating of the non-skid coating system shall meet the requirements of 3.21.1. When tested in accordance with 4.6.5, the CIELAB color difference of the mixed non-skid topcoat and color topping shall not exceed 0.5 CIELAB units form the original color values measured prior to the shelf life test. The mixed non-skid topcoat and color topping shall also meet the requirements of 3.17 when the color difference is calculated using as the original color that is obtained for the one year storage test sample.

3.22 Thickness. When tested in accordance with 4.6.20, the average overall minimum thickness of the total, fully cured types I, II, and IV coating systems, including aggregate, shall be 0.75 mm (30 mils). Type III systems shall be a minimum of 2.25 mm (90 mils) which shall include a minimum of 1.5 mm (60 mils) of intermediate flexible underlayment.

3.23 Weight. When tested in accordance with 4.6.20, the mass of the cured coating system, including aggregate, shall not exceed the values in table VI.

TABLE VI. Maximum weight.

| | Grams per centimeter squared ($g/cm^2$) | Pounds per square foot ($lb/ft^2$) |
|---|---|---|
| Type I | .484 | .99 |
| Types II & IV | .215 | .44 |
| Type III | .807 | 1.66 |

3.24 Materials (see 4.2.1).

3.24.1 Material safety data sheet. The contractor shall provide a completed material safety data sheet (MSDS) for each formula at the time of contract award. The MSDS form shall be in accordance with OSHA section 1910.1200, 29 CFR CH XVII and found as part of FED-STD-313. The MSDS shall also be included with each unit of issue of material covered by this specification (see 4.2.1 and 5.5).

3.24.2 Toxic materials. When evaluated in accordance with 4.7, the materials used in the components shall have no known carcinogenic or potentially carcinogenic materials identified by Occupational Safety and Health Administration (OSHA) regulated carcinogens, International Agency for Research on Cancer (IARC) latest monographs, and National Toxicology Program (NTP) latest annual report. The manufacturer is responsible for maintaining carcinogenic free materials. Questions pertinent to this requirement shall be referred by the contracting activity to the appropriate departmental medical service who will act as an advisor to the contracting activity. The contracting activity shall be provided with a copy of the Navy Environmental Health Center (NEHC) findings. The NEHC findings shall be included with each unit of issue of material covered by this specification (see 4.2.1 and 5.7).

In addition to the above toxicity restrictions, the toxicity characteristic content of the dried coating of the non-skid coating system shall not exceed the values listed in table VII when tested in accordance with 4.7.

TABLE VII. Toxicity characteristic.

| Requirement | Maximum |
|---|---|
| Toxicity content (soluble), mg/L | |
| Arsenic | 5.0 |
| Barium | 100.0 |
| Benzene | 0.5 |
| Cadmium | 1.0 |
| Carbon tetrachloride | 0.5 |
| Chlordane | 0.03 |
| Chlorobenzene | 100.0 |
| Chloroform | 6.0 |
| Chromium | 5.0 |
| o-Cresol | 200.0 |
| m-Cresol | 200.0 |
| p-Cresol | 200.0 |
| 2,4-D | 10.0 |
| 1,4-Dichlorobenzene | 7.50 |
| 1,2-Dichloroethane | 0.50 |
| 1,1-Dichloroethylene | 0.70 |
| 2,4-Dinitrotoluene | 0.13 |
| Endrin | 0.02 |
| Heptachlor (and its epoxide) | 0.008 |
| Hexachlorobutadiene | 0.05 |
| Hexachloroethane | 3.0 |
| Lead | 5.0 |
| Lindane | 0.40 |
| Mercury | 0.20 |
| Methoxychlor | 10.0 |
| Methyl ethyl ketone | 200.0 |
| Nitrobenzene | 2.0 |
| Pentachlorophenol | 100.0 |
| Pyridine | 5.0 |
| Selenium | 1.0 |
| Silver | 5.0 |
| Tetrachloroethylene | 0.70 |
| Toxaphene | 0.50 |
| Trichloroethylene | 0.50 |
| 2,4,5-Trichlorophenol | 400.0 |
| 2,4,6-Trichlorophenol | 2.0 |
| 2,4,5,-TP (Silvex) | 1.0 |
| Vinyl Chloride | 0.20 |

The values in table VII are instantaneous values for toxic materials and are not time weighted averages.

3.24.3 Toxicity certification. The manufacturer shall certify that each individual coating of the non-skid coating does not contain the following materials in excess of 0.06% by weight of the dry paint: toluene, chlorinated solvents that are not listed in table VII, hydrolyzable chlorine derivatives, and coal tar or coal tar derivatives.

3.24.4 Crystalline silica content. When evaluated in accordance with 4.7, each individual coating of the non-skid coating system shall not contain crystalline silica in excess of 0.1 % by weight of the dry paint.

3.24.5 Derivatives of ethylene glycol. When evaluated in accordance with 4.7, each individual coating of the non-skid coating system shall not contain esters or ethers of ethylene glycol.

3.24.6 Volatile organic content (VOC). When tested in accordance with 4.8, the individual VOC of the primer, intermediate coats and non-skid topcoats, when in the ready-to-apply condition, shall not exceed 340 g/L (2.8 lb/gal). When tested in accordance with 4.8, the VOC of the color topping, when in the ready-to-apply condition, shall not exceed 420 g/L (3.5 lb/gal).

3.24.7 Soluble metals content and total metal content. Soluble metals content and total metal content of each individual coating of the non-skid coating system shall not exceed the values listed in tables VIII and IX when tested in accordance with 4.9.

TABLE VIII. Soluble metals content.

| Requirement | Maximum |
|---|---|
| Metals content (soluble), mg/L | |
| Antimony and/or its compounds | 15 |
| Arsenic and/or its compounds | 5 |
| Barium and/or its compounds (excluding barite) | 100 |
| Beryllium and/or its compounds | 0.75 |
| Cadmium and/or its compounds | 1 |
| Chromium (VI) compounds | 5 |
| Chromium and/or chromium (III) compounds | 560 |
| Cobalt and/or its compounds | 80 |
| Copper and/or its compounds | 25 |
| Fluoride salts | 180 |
| Lead and/or its compounds | 5 |
| Mercury and/or its compounds | 0.2 |
| Molybdenum and/or its compounds | 350 |
| Nickel and/or its compounds | 20 |
| Selenium and/or its compounds | 1 |
| Silver and/or its compounds | 5 |
| Thallium and/or its compounds | 7 |
| Vanadium and/or its compounds | 24 |
| Zinc and/or its compounds | 250 |

TABLE IX. Total metals content.

| Requirement | Maximum |
|---|---|
| Metals content (total), weight percent | |
| Antimony and/or its compounds | 0.05 |
| Arsenic and/or its compounds | 0.05 |
| Asbestos | 0.0001 |
| Barium and/or its compounds (excluding barite) | 1.00 |
| Beryllium and/or its compounds | 0.0075 |
| Cadmium and/or its compounds | 0.01 |
| Chromium (VI) compounds | 0.05 |
| Chromium and/or chromium (III) compounds | 0.25 |
| Cobalt and/or its compounds | 0.80 |
| Copper and/or its compounds | 0.25 |
| Fluoride salts | 1.80 |
| Lead and/or its compounds | 0.06 |
| Mercury and/or its compounds | 0.002 |
| Molybdenum and/or its compounds | 0.35 |
| Nickel and/or its compounds | 0.20 |
| Selenium and/or its compounds | 0.01 |
| Silver and/or its compounds | 0.05 |
| Thallium and/or its compounds | 0.07 |
| Vanadium and/or its compounds | 0.24 |
| Zinc and/or its compounds | 0.50 |

3.25 Directions for mixing and applying. The manufacturer shall provide written directions for mixing and applying each individual coating used in the non-skid coating system on its container. These directions shall cover both small (1 L or 4 L) (1 quart [qt] or 1 gal) and field (19 L) (5 gal) kit procedures, and shall specifically state the differences, if any, between the two. These directions shall be in the format specified in ASTM F 718 and shall include, as a minimum, information on the mixing ratios by mass and by volume, induction time, pot life, upper and lower temperature and humidity limits for application, coverage per L (gal), and safety precautions (see 4.2.1).

3.26 Performance in service. When tested in accordance with 4.11, the coating system shall show none of the following:

(a) wear-through (profile of the non-skid surface reduced to showing the primer or steel deck);
(b) ASTM D 660 checking (slight breaks in the film not penetrating to the underlying surface rated less than ASTM 8;
(c) ASTM D 661 cracking (breaks which extend through the coating film to the substrate surface) rated less than No 8;
(d) breaking (flaking);
(e) loss of adhesion (peeling);
(f) or other deficiency which would adversely affect its performance as specified in table X.

TABLE X. Service life values.

| | Composition G (months) | Composition L (landings) |
|---|---|---|
| Type I | 12 | 10,000 |
| Type II | 6 | 5,000 |
| Types III and IV | 6 | ------ |

3.27 Label. Manufacturer shall prepare container label instructions for each individual coating used in the non-skid coating system on its container in accordance with the requirements of 29 CFR Parts 1910, 1915, 1917, 1918, 1926 and 1928 - Hazard Communication Act, Final Rule (see 5.1).

4. QUALITY ASSURANCE PROVISIONS

4.1 Responsibility for inspection. Unless otherwise specified in the contract or purchase order, the contractor is responsible for the performance of all inspection requirements (examinations and tests) as specified herein. Except as otherwise specified in the contract or purchase order, the contractor may use his own or any other facilities suitable for the performance of the inspection requirements specified herein, unless disapproved by the Government. The Government reserves the right to perform any of the inspections set forth in this specification where such inspections are deemed necessary to ensure supplies and services conform to prescribed requirements.

4.1.1 Responsibility for compliance. All items shall meet all requirements of sections 3 and 5. The inspection set forth in this specification shall become a part of the contractor's overall inspection system or quality program. The absence of any inspection requirements in the specification shall not relieve the contractor of the responsibility of ensuring that all products or supplies submitted to the Government for acceptance comply with all requirements of the contract. Sampling inspection, as part of the manufacturing operations, is an acceptable practice to ascertain conformance to requirements, however, this does not authorize submission of known defective material, either indicated or actual, nor does it commit the Government to accept defective material.

4.2 Classification of inspections. The inspection requirements specified herein are classified as follows:

(a) Qualification inspection (see 4.3).
(b) Quality conformance inspection (see 4.4).

4.2.1 Certification data/report. When specified in the contract or order, each lot of each individual coating material shall be certified (see 6.3).

4.3 Qualification inspection. Qualification inspection shall be conducted at a Government, commercial or manufacturer's laboratory approved by the Naval Sea Systems Command (NAVSEA). Tests specified in 4.6.9 (Fire Resistance), 4.7 (Toxicity), and 4.11 (Performance in service) shall be performed by the Government. Tests at other than a Government laboratory shall be monitored by the

Defense Contract Management Area Operations (DCMAO). Qualification tests shall consist of the tests specified in 4.6, 4.7, 4.8, and 4.9. The service test shall be conducted on a flight deck as specified in 4.11 after successful completion of all laboratory tests in 4.6, 4.7, 4.8 and 4.9 with the exception of 4.6.18 and 4.6.19.1 which shall be performed concurrently. Testing of products on Government ships shall be conducted at the convenience of the Government.

4.3.1 Qualification samples. For qualification testing specified in 4.11, a sample of each individual coating of the non-skid coating system being qualified to a specific type and composition shall be submitted to the NAVSEA approved laboratory sufficient to cover 186 $m^2$ (2000 $ft^2$). One L (1 qt) samples of all resin in the system and non-skid aggregate shall also be submitted to the NAVSEA approved laboratory for qualification testing. Each individual coating of the non-skid coating system tested shall be drawn from regular production stocks by a government representative. A test report detailing the results of any required testing performed by the manufacturer, his representatives or at his behest by employed agents shall be provided by the manufacturer to the contracting officer, his agent or the qualifying activity, as appropriate.

4.3.1.1 Manufacturer's shall qualify total non-skid systems consisting of:

(a) Type I, compositions G and L: The total non-skid coating system shall consist of an optional primer (if the non-skid topcoat is designed for direct application to the substrate), any needed intermediate coatings, non-skid topcoat, and color topping coatings.
(b) Type II, compositions G and L: The total non-skid coating system shall consist of a primer, any needed intermediate coatings, non-skid topcoat, and color topping coatings.
(c) Type III, composition G: The total non-skid coating system shall consist of a primer, any needed intermediate coatings, non-skid topcoat, and color topping coatings. (Note: type III does not include a composition L).
(d) Type IV, composition G: The total non-skid coating system shall consist of a primer, any needed intermediate coatings, non-skid topcoat, and color topping coatings. (Note: type IV does not include a composition L).

4.3.2 Extension of qualification. Approval of qualification for Navy dark gray to match color 36076 of FED-STD-595 shall constitute approval for other colors of the same type and composition. Systems that are submitted for qualification for type I that do not pass the durability requirements for type I but pass the durability requirements for type II shall be qualified for type II of the same composition provided that the system passes all other requirements for that type and composition. Approval of qualification for type III does not constitute approval for type I and II.

4.3.3 Retention of qualification.

4.3.3.1 Cancellation of qualification. A manufacturer's qualified product list (QPL) approval is subject to immediate cancellation for any of the following:

(a) Failure of any individual coating of the non-skid coating system to meet any of the requirements of section 3 when tested in accordance with section 4.2.
(b) Manufacturer changes in any individual coating composition, or changes to ASTM F-718 data sheets, which were submitted with the application for approval, without prior NAVSEA approval.

4.4 Quality conformance inspection.

4.4.1 Lot. For purposes of sampling, inspection, and testing, a lot shall consist of containers from one uniform batch of coating material produced in one facility using the same raw materials and production processes and offered for delivery at one time. A batch is defined as the end product of a single manufacturing process which begins with several raw materials and includes one or more constituent operations. Any change to a batch shall constitute a new lot. The size of the lot shall be measured in units of 3.785 L (1 gal).

4.4.1.1 Sampling for quality conformance inspections and tests. As a minimum, the contractor shall randomly select a sample quantity from each lot of coating material in accordance with table XI and subject them to the inspection and tests of 4.4.2, 4.4.3, 4.6, 4.7, 4.8, 4.9, and 4.11. The sample size depends on the lot size. If one or more samples fail an inspection lot test, the entire lot shall be rejected. The contractor has the option of screening 100% of the rejected lot for the defective characteristic(s) or providing a new lot, which shall be tested in accordance with the sampling plan herein. The contractor shall maintain for a period of three years after contract completion, records of inspections, tests, and any resulting rejections.

TABLE XI. Sample size for quality conformance inspections and tests.

| Lot size | Sample size |
|---|---|
| 2 - 25 | 3 |
| 26 - 50 | 5 |
| 51 - 90 | 6 |
| 91 - 150 | 7 |
| 151 - 280 | 10 |
| 281 - 500 | 11 |
| 501 - 1200 | 15 |
| 1201 - 3200 | 18 |
| 3201 - 10,000 | 22 |
| 10,000 and over | 29 |

4.4.2 Inspection of packaging. An inspection shall be made to determine that the packaging (preservation, packing, marking, and labeling) for shipment, stowage and storage shall comply with the requirements of section 5 and the documents specified therein.

4.4.3 Lot acceptance tests. Each lot of the individual coatings of the non-skid coating system offered for delivery shall be subjected to the tests specified in table XII.

TABLE XII. Lot acceptance tests.

| Characteristics | Requirement paragraph | Test paragraph |
|---|---|---|
| Abrasion of arresting cable 1/ | 3.3 | 4.6.1 |
| Appearance of dried coating | 3.4 | 4.6.2 |
| Application properties | 3.5 | 4.6.3 |
| Coefficient of friction 1/ | 3.6 | 4.6.4 |
| Color | 3.7 | 4.6.5 |
| Condition in Container | 3.8 | 4.6.6 |
| Drying time | 3.10 | 4.6.8 |
| Flash point | 3.12 | 4.6.10 |
| Flexibility 1/ | 3.13 | 4.6.11 |
| Impact resistance 2/ | 3.15 | 4.6.13 |
| Pot life | 3.16 | 4.6.14 |
| Resistance to wear 1/ | 3.19 | 4.6.17 |
| Thickness 1/ | 3.22 | 4.6.20 |
| Weight 1/ | 3.23 | 4.6.20 |

1/ Needs only to be performed on first lot and every 19,000 L (5000 gal) thereafter.

2/ Perform this test on duplicate panels cured 4 days at room temperature (75°F) for each batch delivered using only 4.6.13(a) (the seawater immersion testing condition can be omitted for lot acceptance testing). For each 5000 gal of material delivered, the entire test (4.6.13(a) and 4.6.13(b)) shall be performed on the first lot delivered.

4.5 Preparation for testing.

4.5.1 Standard conditions. In case of dispute, tests shall be performed at standard testing conditions, which are 24 plus or minus (+/-) 2°C (75°F +/- 5°F) and a relative humidity of 50% +/- 5 %, with the exception of 4.6.3 which shall be performed at the temperatures specified.

4.5.2 Panel substrate material. Steel panels in accordance with 4.5.2.1 shall be used for all of the tests specified in 4.6 which require test panels. In addition, reinforced plastic, teak and douglas fir panels in accordance with 4.5.2.2 and 4.5.2.3 shall also be used for the tests specified in 4.6.12 and 4.6.13.

4.5.2.1 Steel surfaces. Ordinary strength steel panels 3 mm (1/8 in) thick (nominal) in accordance with grade A of MIL-S-22698 shall be abrasive-blasted to a uniform white-metal finish in accordance with SSPC SP5 to a 51 to 102 micrometers (3 to 4.5 mil) profile. This finish is characterized by the removal of all foreign matter, the absence of visible residues and discolorations, a gray-white uniform color, and a uniform slightly roughened surface. The panels shall then be cleaned with oil-free air or vacuum, and protected from moisture during storage.

4.5.2.2 Reinforced plastic surface. Fiberglass surface coating shall be applied to an "A" face of AC plywood, and shall consist of two layers of chopped strand mat, 1.5 oz/sq-ft, Owens-Corning M-721 or equal and one surface layer of 10.5 oz/sq-yd woven cloth, style 7500, with amine-silane treatment. Fiberglass reinforcement shall be applied in three sequential layers each well saturated and rolled or squeezed free of air bubbles, with a resin system of Reichhold Chemicals 37-127 epoxy and 37-607 hardener at a ratio of 100 to 45 parts by weight respectively. Final resin coat shall cover the glass fiber by 10-20 mils. The glass fiber shall meet the requirements of MIL-C-9084, type XII or type XIIA, class 2. The covering shall be allowed to cure seven days minimum. Sanding and coating humidity conditions shall be same as 4.5.2.3.

4.5.2.3 Wood species. Wood species will be used for type III testing only. Panels shall be conditioned to equilibrium moisture content (EMC) of 15 +/- 2% (Coating shall be applied at the same relative humidity (RH) and temperature required to provide a constant EMC). The surface shall be sanded smooth with grit no coarser than 120 aluminum oxide.

4.5.2.3.1 Teak. Teak species shall be *Tectona grandis* of asian origin; surface shall be clear wood, no defects.

4.5.2.3.2 Douglas Fir. Douglas fir shall be species of *Pseudotsuga menziesii*.

4.5.3 Preparation of test panels. Panels prepared as specified in 4.5.2 shall be primed with the primer, if any, designated by the contractor (see 3.2 and 3.5). The primer film thickness on test panels shall be within a tolerance of +/-0.025 mm (1 mil) of the contractors recommended thickness. If a range is given for the primer thickness, the minimum number shall be used for testing purposes except for those tests in section 4.6.12 and 4.6.13 where the maximum number shall be used. The primer shall be allowed to dry for the time specified by the contractor (see 3.25). The intermediate coats, if any, and topcoat shall be mixed, kept at standard conditions during the induction time, if any, applied, as specified in the contractor's instructions (see 3.25), and allowed to cure for 14 days at standard conditions unless otherwise specified in the test method.

4.6 Tests. Tests shall be conducted in accordance with the procedures specified herein. Each result shall be compared with the applicable requirement in section 3, and evaluated for conformance.

4.6.1 Abrasion of arresting cable (composition L only). Three 250 by 150 by 3 mm (10 by 6 by 1/8 in) (nominal) test panels shall be prepared as specified in 4.5.3. Each panel shall be conditioned by running 50 cycles in the cable abrasion tester specified herein before determination of the abrasion of the arresting cable. Each panel shall be used to abrade a new 3 mm (1/8 in) (nominal) diameter, 300 mm (12 in) (nominal) long cold-rolled ASTM A 229 Class 2 steel rod. The diameter of each rod shall be measured before use to the nearest 0.0025 mm (0.1 mil) in ten places which will come in contact with the test panel. The rod shall be held in a jig in the test apparatus as shown on figure 1. After completion of 200 cycles in the abrasion machine, the rod shall be removed from the jig and the diameter of the rod shall be measured to the nearest 0.0025 mm (0.1 mil) in the

same ten places. The difference in thickness in each of the ten places shall be computed. The wear of each rod shall be the average of these ten values. The average of the wear of the three rods shall be computed, and this value shall be used to determine conformance to the requirements specified in 3.3.

4.6.1.1 Cable abrasion test apparatus. The test apparatus is shown on figures 1 and 2, and may be constructed with the following features:

(a) A carriage on which the test panel is attached. The test panel shall be securely fastened to the carriage, and shall be moved in a reciprocating motion 225 mm (9 in) along its long axis at a frequency of 30 cycles per minute.

(b) A jig which holds the 300 mm (12 in) steel rod in contact with the test panel, with the axis of the rod horizontal at a right angle to the direction of motion of the reciprocating carriage. The clamps holding the rod shall not come into contact with the test panel, and shall not permit the rod to bend, twist, or rotate during the test. The jig shall be constructed so as to put the rod under a load of 13.6 +/- 0.1 kilograms (kg) (30 +/- 1/4 pounds) during the test.

4.6.2 Appearance of the dried coating. Separate samples of each coating component of the system shall be conditioned and then mixed at 24°C (75°F). Mixing shall be in accordance with the manufacturer's ASTM F 718 data sheet. After the manufacturer designated induction time for the temperature, the coating shall be applied in accordance with the ASTM F 718 instruction to a test plate. After curing, the appearance shall be in accordance with the requirements of 3.4. The appearance of the primer and each intermediate coat shall be observed before application of the subsequent coat.

4.6.3 Application properties. Two 250 by 150 by 3 mm (10 by 6 by 1/8 in) (nominal) primed steel panels (one panel for type IV coatings) shall be equilibrated at the temperature at which the application properties are to be determined. Separate samples of each individual coating of the non-skid coating system shall be conditioned, mixed and inducted for one-half of the specified pot life period for that temperature in accordance with the manufacturer's ASTM F 718 data sheet at 10, 24, and 32°C (50, 75 and 90°F), respectively. Coatings shall be applied to the panels at the matching temperatures in accordance with the manufacturer's ASTM F 718 instructions to metal surfaces at 10, 24, and 49°C (50, 75 and 120°F), respectively. Spraying, rolling or trowel properties shall be in accordance with 3.5, as appropriate. For this test, material from the pot life test specified in 4.6.14 shall not be used. Type I, II, or III coating shall be spread over the panel with a roller, and then rolled in one direction to produce the characteristic rolled appearance (see 3.5). The type I, II, or III coating shall be trowelled onto the second panel using a V-notched trowel the notches of which shall be 6.3 mm (1/4 in) deep and 12.6 mm (1/2 in) (nominal) across. Type IV material shall be sprayed in several passes to produce a uniform finish (see 3.5). During mixing and application, the coating shall be observed and evaluated for conformance with 3.5. These panels may be used for the drying time test in 4.6.8.

4.6.4 Coefficient of friction. Testing shall be conducted as follows:

4.6.4.1 Test panel preparation. Six 300 by 300 by 3 mm (12 by 12 by 1/8 inch (nominal) steel panels, prepared in accordance with 4.5.3 shall be coated with non-skid in accordance with the manufacturer's ASTM F 718 data sheet. The type I, II, and III non-skid coating shall be rolled parallel to the 250 mm (10 in) dimension. Three of the test panels shall be subjected to 500 cycles of wear in the cable abrasion tester in accordance with the requirements of 4.6.17.

4.6.4.2 Test apparatus. The Slipmeter is shown on figures 3 and 4 and shall be constructed with the following features (figures 8 through 16):

(a) A steel sled having a flat surface 100 by 125 mm +/- 2.5 mm on each dimension (4 by 5 in), and a thickness of 25 to 40 mm (1 to 1.5 in). One 100 mm (4 in) side of the sled shall have a screw eye in the center of the face to which the force gauge is attached. One 100 by 125 mm (4 by 5 in) face of the sled shall be covered with vulcanized neoprene rubber having a Type "A" Durometer hardness of 57 +/- 2 and a thickness over its entire surface of 3 mm (1/8 in) (nominal). The edges of the rubber shall be square, and not beveled. The total weight of the sled with the rubber facing shall be 2.7 +/- 0.2 kg (6.0 +/- 0.5 lb). The sled or the platform movement shall be parallel to the non-skid panel, and shall not tend to lift the sled from the panel.

(b) A force gauge shall be used which: (a) measures 0 to 4.5 kg (0 to 10 lbs) full scale, (b) reads out directly in kg (lbs) on an electronic display with an accuracy of +/- 4.5 g (+/- 0.01 lb), and (c) can be preset to lock onto the highest force encountered. A Chatillon Gauge Model DFG-10 has been found satisfactory for this purpose (see figures 3 and 4).

(c) A platform which moves across a minimum of a 100 mm (4 in) distance at a constant speed of 300 mm (12 in) per minute (nominal). The platform shall have provisions to hold the non-skid panel firmly during the test to prevent twisting or lifting of the panel without interfering with the motion of the sled.

4.6.4.3 Test procedures. The test shall be conducted on the three initial panels without wear and the three panels exhibiting wear as specified in 4.6.4.1. The test panels without wear shall be subjected to 50 cycles in the cable abrasion tester to remove the highest peaks and ridges. Each panel shall be subjected to this test procedure under the following three conditions:

(a) COF test shall first be run with the panel dry;

(b) after completion of the dry condition test, the panels shall be wetted with synthetic sea water in accordance with ASTM D 1141, and the tests shall be repeated; and

(c) after completion of the wet condition, the panels shall be rinsed in tap water to remove the synthetic sea water, dried at 120°C (248°F) for 1 hour, and cooled to standard conditions. The panel shall then be wetted with aircraft turboshaft engine oil in accordance with MIL-L-23699, and the test shall be repeated.

Each panel shall be secured on the moving platform and the sled of the Slipmeter shall be placed onto the panel. The hook on the sled shall be attached to the hook on the force gauge, and the force to be applied by the sled shall be along the axis of the force gauge. The gauge shall be set to zero, and set to display the highest force encountered. The platform shall be started in motion at a rate of 254 +/- 51 mm (10 +/- 2 in) per minute, and the panel allowed to travel a minimum of 100 mm (4 in). The highest force encountered by the sled shall be recorded during the test. The coefficient of friction shall be computed by dividing the reading on the gauge by the mass of the sled. Five replicate measurements shall be made; the panel shall then be turned 90 degrees and five additional measurements shall be made. The average of the ten readings for each panel (30 total) shall be computed. Since friction readings are a function of the surface condition of the steel sled rubber surface, a steel sled with a new vulcanized neoprene rubber shall be used for each product tested. In addition, sleds used for the different test conditions shall be used only for the same conditions. That is a sled used dry shall only be used to test dry friction specimens, sleds used with water shall be used only with water friction specimens, and sleds used to measure oily friction shall be used only for tests of friction on oily specimens. Sleds shall be calibrated against a flat steel block having machined cross hatched v-shaped grooves having a nominal depth of 1.27 mm (0.05 in) and a nominal groove peak to peak distance 0.25 mm (0.01 in). Sleds may continue to be used in testing the same product until repeat measurements on the calibration surface changes by more than five percent (plus or minus). All calibrations shall be performed on the same calibration block since the intent of the calibration blocks are only to determine reproducibility of readings by the rubber pad and thus rubber pad replacement criteria. Calibration of sleds on different calibration blocks during the determination of friction values on a test specimen is not permitted. Calibration shall be performed before and after test specimen friction determinations and the values obtained recorded and reported with the test value. Other methods to move the sled across the panel are acceptable. Some methods use a portable motor which moves the force gauge 100 mm (4 in) at a rate of about 300 mm (12 in) per minute; the force gauge is connected to the sled with a light chain.

4.6.5 Color. Mix the non-skid coating and color topping in accordance with the manufacturer's ASTM F 718 data sheet. Sieve out any gritty substances. Draw down the non-skid topcoat and the color topping on separate glass panels using a sufficient number of successive crosscoats (each having a wet film thickness (WFT) of 0.003" or 3 mils) so that additional coats produce no change in reflectance. Dry at ambient laboratory conditions for 24 hours after each coat. The color deviation ( $\Delta$ E) and the color factors ($\Delta$ L, $\Delta$ a and $\Delta$ b) shall be determined in accordance with ASTM D 2244 using a D65 light source, 45 degree illumination angle and a 0 degree viewing angle. Check for compliance with 3.7 and 3.7.1.

4.6.6 Condition in container. The liquid one-part coating, or components of two-part coatings, shall be examined in accordance with method 3011.1 of FED-STD-141 for the defects specified in 3.8. The presence of ingredients which cannot be redispersed within 5 minutes by hand stirring with a paddle for a 4 L (1 gal) or smaller quantities or stirring (agitation) with a power mixer or mechanical shaker for 19 L (5 gal) quantities shall constitute a failure of this requirement. Condition in container shall be in accordance with the requirements of 3.8.

4.6.7 Coverage. For types I, II, and IV, a 914 by 914 by 3 mm (36 by 36 by 1/8 in) steel panel shall be prepared as specified in 4.5.2.1. Coverage shall meet the requirements in 3.9.1 and 3.9.2. For type III coatings, a 914 by 914 by 3 mm (36 by 36 by 1/8 in) fiberglass/wood panel shall be prepared as specified in 4.5.2.2. The primer, intermediate coats, and topcoat shall be separately applied and curing times observed in accordance with the directions provided in 3.25. Before applying the next coating to the system each coating shall be weight determined using the formula below.

Coverage = (Area x Mass/Unit Volume)/(Mass 2 - Mass 1)

Where:

Area = 914 by 914 (36 by 36)

Mass/unit volume = weight per kilogram/liter [kg/L] or pounds per gallon [lbs/gal] material (not including container weight, see table I)

Mass 1 = weight of panel before application
Mass 2 = weight of panel after application

4.6.8 Drying time. Three 152 by 152 by 3 mm (6 by 6 by 1/8 in) (nominal) panels shall be prepared in accordance with 4.6.3 each at one of the temperatures specified in 3.10 and maintained at that temperature. The drying time of the primer and intermediate coats shall be determined by applying the subsequent coat at the minimum allowable drying time for that temperature. Any softening or lifting of these coatings shall constitute failure. The finished panels shall be kept at the specified temperature for the allowable drying time. Immediately, 16 layers of Kaydry wipers or equivalent shall be placed on to the surface of the coating system and a 2.25 kg. (5-pound) cylindrical weight with a diameter of 66 mm (2.625 inches) placed on the tissue. After 15 minutes, the weight shall be removed and the paper examined. Staining or discoloration on the paper caused by the coating constitutes failure of this test. The appearance of these panels shall be evaluated as specified in 4.6.2 and shall be in accordance with the requirements of 3.4.

4.6.9 Fire resistance. The coating system shall be evaluated in accordance with the procedure specified in MIL-STD-1623. The average of three panels shall be used to determine conformance with the requirements of 3.11.

4.6.10 Flash point. The flash point shall be determined in accordance with ASTM D 3278 on each individual component of the non-skid coating system after each has been thoroughly-stirred. Flash point of each type shall be in accordance with the requirements of 3.12.

4.6.11 Flexibility (type III). The type III coating shall be mixed, applied, and cured to the test panel in accordance with the manufacturer's ASTM F 718 data sheet for the complete system. The type III coating system test panel shall be tested over a 127 mm (5 in) mandrel in accordance with ASTM F 137 except bending shall be at 20 degrees at uniform rate. The panel shall be examined for cracking, breaking or loss of adhesion immediately after bending.

The panels shall be prepared and tested in such a manner that the ridges in the profile run parallel to the axis of the bend. Flexibility shall be in accordance with the requirements of 3.13.

4.6.12 Immersion resistance. Sixteen 150 by 50 by 3 mm (6 by 2 by 1/8 in) (nominal) steel, reinforced plastic and wood (type III only) panels as specified in 4.5.2 shall be prepared as specified in 4.5.3 (prepared using the highest primer thickness specified). Eight panels shall be subjected to two impacts from a falling steel ball (see 4.6.13); the impacts shall be 100 mm +/- 6.4 mm (4 +/- 0.25 in) apart and equidistant from the edges and sides of the panels. Each of eight widemouth jars with tightly-fitting caps shall be filled to a depth of 75 mm (3 in) (nominal) with one of the following materials:

(a) Grease in accordance with DOD-G-24508.
(b) JP-5 jet fuel in accordance with MIL-T-5624.
(c) Hydraulic fluid in accordance with MIL-H-83282.
(d) Ethyl alcohol in accordance with O-E-760.
(e) Aircraft engine turboshaft lubricating oil in accordance with MIL-L-23699.
(f) Detergent in accordance with MIL-D-16791, 0.5 percent solution in synthetic sea water in accordance with ASTM D 1141.
(g) Aqueous fire fighting foam in accordance with MIL-F-24385, 10 percent solution in synthetic sea water in accordance with ASTM D 1141.
(h) Deicing-defrosting fluids in accordance with MIL-A-8243.

Two panels, one impacted and one unimpacted for each primer thickness, shall be placed in each jar, each panel resting on its 50 mm (2 in) side, with one-half immersed and one-half above the test material and in such a manner as to not touch each other. The jars shall be sealed tightly and kept at standard conditions for 4 weeks for all fluids except JP-5, ethyl alcohol and deicing-defrosting fluid, which shall be tested for 24 hours only. Upon removal from the immersion medium, the panels shall be probed with a sharp, 10 mm (1 in) wide blade, wood chisel and compared with the identical untested control panel to detect signs of softening, loss of adhesion, or separation between layers of coating, and otherwise examined for conformance to 3.14. The panels immersed in JP-5, ethyl alcohol and deicing-defrosting fluid shall be allowed a 6-hour recovery period before evaluation. All other panels shall be examined for conformance immediately after removal from the immersion medium. Results of the evaluation shall be in accordance with the requirements of 3.14.

4.6.13 Impact resistance. Four 150 by 150 by 5 or 6 mm (6 by 6 by 3/16 or 1/4 in) (nominal) test steel, reinforced plastic, and wood (type III only) panels as specified in 4.5.2 shall be prepared as specified in 4.5.3 (prepared using the highest primer thickness specified). Immediately before testing, two panels shall be subjected to each of the following treatments: (a) no treatment and (b) 15 days of immersion in room temperature seawater in accordance with ASTM D 1141.

4.6.13.1 Immediately upon removal from treatment, each panel shall be subjected to 25 impacts by a 0.9 +/- 0.05 kg (2 +/- 0.1 lb) solid steel ball (approximate diameter 60 mm (2.37 in)) dropped from a height of 2.5 to 2.55 meters (8 to 8.1 feet). Type IV coatings shall be subject to 1.6 meters (5 feet). The steel ball shall be held in a fixed position by an electromagnet provided with a

centering tip, such as that shown on figure 5, and shall fall freely without a guide directly onto the panel. The panel shall be placed on a steel base such as that shown on figure 6, which is at least 40 mm (1.5 inches) thick and is fitted with guides to position the panel for each impact. Successive points of impact shall form a 5 by 5 pattern, enclosed within an area of about 58 square centimeters (9 square inches), in which the impacts are equally spaced 20 +/- 1.5 mm (3/4 +/- 1/16 in) center-to-center from their nearest neighbors. The impacts on the panel shall be made in the sequence specified on figure 7. The falling steel ball may sometimes be deflected by a ridge of non-skid during impact such that adjacent impact pairs are spaced less than 3/4 in apart. Improperly spaced pairs shall not be included in the evaluation.

4.6.13.1.1 Upon completion of each impact test, the panel shall be probed by hand with a hand held, sharpened, 25.4 mm (1 in) (nominal) steel cold chisel in an area that received no impacts in order to judge the force needed to remove the coating. The panel shall then be probed in the impact area with the chisel, using a force less than that used in the non-impact area, and coating which has been loosened by the impact of the steel ball shall be removed from the panel.

4.6.13.1.2 The percentage of coating system remaining intact and tightly adhering to the panel shall be evaluated as follows: In the 5 by 5 pattern of impacts, there are 40 pairs of impacts separated by 20 mm (3/4 inch) center to center. In every case in which one or more layers of the coating system has been removed with the chisel, so as to connect one pair of impacts, the percentage of intact coating system is reduced by 2.5. Thus, a passing value of 90 percent indicates that no more than four pairs of adjacent impacts are connected. Results for duplicate panels tested under the same conditions shall be averaged. Failure of one of the two conditions constitutes failure of this test. Impact resistance for each type shall be in accordance with the requirements of 3.15.

4.6.14 Pot life. Separate samples of each individual coating of the non-skid coating system sufficient to fill a standard 1 L (1 qt) can to within 13 mm (1/2 in) of the top shall be conditioned and mixed in accordance with the manufacture's ASTM F 718 directions at 10, 24, and 32°C (50, 75 and 90°F), respectively. If an induction time is called for in the directions, the mixed components shall be kept at the mixing temperature during the induction time. The pot life shall be measured from the end of the induction time, if any, and the mixed coating shall be held at the temperature specified for the pot life. Minimum pot life for each type shall be in accordance with the requirements of 3.16. None of the mixed coating shall be removed for other tests during the determination of the pot life. At the end of the specified pot life, the coating shall meet all the requirements of 4.4.3. (For lot acceptance tests, only performance at the end of pot life shall be determined by application properties (see 4.6.3) when applied to primed 150 by 150 mm (6 by 6 in) (nominal) steel plates and impact testing (see 4.6.13) at 4 days cure.)

4.6.15 Resistance to accelerated aging by light and water. Three 150 by 75 by 3 mm (6 by 3 by 1/8 in) (nominal) steel test panels shall be prepared as specified in 4.5.3 except that the aggregate shall be removed by sieving before application of the topcoat. Two of the panels shall be subjected to two impacts from a falling steel ball (see 4.6.13); each impact shall be 25 mm (1 inch) from the edge (3 in dimension) and 40 mm (1.5 inches) from the sides of the panel (6 in dimension). The panels shall be tested as specified in ASTM G 53 for 200 hours in

an accelerated weathering tester (Q-U-V Cabinet, The Q Panel Corporation, Cleveland, OH; Atlas UVCON, The Atlas Electric Devices Company, Chicago, IL; or equal) which operates on alternate 4-hour periods of condensation at 40°C. The lamps shall be UV-B lamps number QFS-40 or equal. At the completion of the exposure period, the chalking shall be determined in accordance with ASTM D 659 and the panels shall be visually evaluated for compliance with 3.17. The panels shall be washed with mild soap and water, rinsed and allowed to dry overnight before calculating the color differences in accordance with ASTM D 2244. Results shall be as specified in 3.17.

4.6.16 Resistance to accelerated corrosion. Two 150 by 75 by 3 mm (6 by 3 by 1/8 in) (nominal) steel test panels shall be prepared as specified in 4.5.3, except that both sides and edges of these panels shall be primed. One panel shall receive two impacts from a falling steel ball as specified in 4.6.13. The impacts shall be 25 mm (1 in) (nominal) from the end and 40 mm (1.5 in) (nominal) from the sides of the panel. Both panels shall be tested for 1000 hours in a salt fog cabinet as specified in ASTM B 117. The coating system shall be examined for loss of adhesion and separation between coats. A portion of the coating shall be removed from each steel panel, and the underlying steel shall be observed for corrosion under the coating system. Loss of adhesion and allowed corrosion shall be in accordance with the requirements of 3.18.

4.6.17 Resistance to wear. Three steel panels 250 by 150 by 3 mm (10 by 6 by 1/8 in) (nominal) shall be prepared as specified in 4.5.3. The mass of each panel shall be measured to the nearest 0.5 g (0.001 lb) before application of the coating system. Each panel shall be abraded by the cable abrasion tester specified in 4.6.1 for 50 cycles and then its mass determined. The panel shall then be worn for an additional 450 cycles in the cable abrasion tester for types I, II, III coatings or an additional 300 cycles for type IV coatings. For abrasive coatings, the wire in the cable abrasion tester shall be replaced after the first 50 cycles and every 150 cycles thereafter. After completion of the wear, the final coating mass shall be taken. The percent of determined mass loss is calculated as follows:

$$\text{Percent mass loss} = 100 \times (M2 - M3)/(M2 - M1)$$

M1 = Mass of panel before coating
M2 = Mass at 50 cycles
M3 = Mass at end of test

The average percent of determined mass loss of the three panels shall be computed. Loss of mass shall conform to the requirements of 3.19.

4.6.18 Type III only - adhesion of the intermediate coat. The adhesion of the intermediate coat shall be determined in accordance with ASTM D 4541 for the primer and intermediate coat of the non-skid coating system. Adhesion of the intermediate coat shall be in accordance with 3.20.

4.6.19 Storage stability.

4.6.19.1 Long-term storage stability. Full, unopened containers constituting the components of the paint or kit (size of the container shall reflect the contract requirement [see 6.2]) of the coating system shall be kept undisturbed for 1 year at ambient laboratory conditions. After this period, the coating system shall comply with all of the requirements of this specification. Long-term storage stability shall be evaluated by running all the lot acceptance tests (see 4.4.3). Coating shall be in accordance with the requirements of the appropriate section 3 paragraphs.

4.6.19.2 Accelerated storage stability. Full, unopened container(s) constituting the components of the paint or kit (size of the container shall reflect the contract requirement [see 6.2]) of the coating system shall be kept undisturbed for a period of 4 weeks at a temperature of 49°C (120°F). Accelerated storage stability shall be evaluated by running all of the lot acceptance tests (see 4.4.3) after equilibrating the coating system at standard conditions. Coating shall be in accordance with the requirements of the appropriate section 3 paragraphs.

4.6.20 Thickness and weight. Three ordinary strength steel panels (in accordance with MIL-S-22698, grade A) each 150 by 250 by 3 mm (6 by 10 by 1/8 in), shall be as specified in 4.5.2. The tare weight of each panel shall be determined to the nearest 0.1 g (0.00002 lb), and the thickness of each panel shall be measured with a micrometer at 20 equally-distributed points. The areas of the test plates shall be determined to the nearest 0.1 $cm^2$ (0.04 $in^2$). The non-skid coating system shall be applied to each panel in accordance with the instructions provided in 3.5 so as to completely cover the steel plates, and the coating system shall be allowed to cure for 96 hours. After curing, any excess coating shall be cleaned from the edge of the panels. The thickness of each panel shall be measured with a micrometer at each of the 20 points measured previously. The difference in thickness of the uncoated and coated steel panels at each of the 20 points shall be calculated. The thickness of each panel shall be the average of the 20 measured thicknesses. The average thickness of the three panels shall be computed. The average thickness shall be in accordance with the requirements of 3.22. The weight of each panel shall be determined to the nearest 0.1 g (0.00002 lb), and the tare weight shall be subtracted to give the net weight of the coating. Average the areas of the three test plates. The three net weights shall be averaged and divided by the average test plate area to convert to grams per square centimeter. The weight of the coating will meet the requirements of 3.23.

4.7 Toxicity. To determine conformance to requirements of 3.24.2, the manufacturer of the material shall disclose the formulation of his product to the Navy Environmental Health Center, Code 34, 2510 Walmer Avenue, Norfolk, VA 23513-2617. The disclosure of proprietary information, which shall be held in confidence, shall include: the name, formula, and approximate percentage by weight and volume of each ingredient in the product; the results of any toxicological testing of the product; identification of its pyrolysis products; and any other information as may be needed to permit an accurate appraisal of any toxicity problem or issues associated with the handling, storage, removal, application, use, disposal, or combustion of the material. Information submitted shall be clearly marked or identified to show it is being provided in connection with qualification under MIL-C-24667. In addition, the manufacturer shall provide a current MSDS for each product, in addition to a current MSDS for each ingredient used in the formulation. Within 30 days prior to data submission, the

manufacturer shall contact the supplier of each ingredient, and confirm each MSDS submitted is current. In addition, maximum concentration of contaminants for toxicity shall be determined on the dried powderized coating of the non-skid coating system in accordance with the 40 Code of Federal Regulation (CFR) Ch 1, Part 261, Appendix II - Method 1311, Toxicity Characteristic Leaching Procedure (TCLP). The maximum concentration of contaminants for toxicity of each individual mixed and cured coating of the non-skid coating system shall be in accordance with the requirements of 3.24.2.

4.8 Volatile organic compounds (VOC). The VOC of each individual coating of the non-skid coating system, in ready-to-use condition, shall be determined by Method 24 of the U.S. Environmental Protection Agency, 40 CFR Ch. 1, Part 60, Appendix A, Determination of Volatile Matter Content, Density, Volume Solids and Weight Solids of Surface Coatings. VOC shall be in accordance with the requirements of 3.24.6.

4.9 Soluble and total metal content. Soluble and total metal content shall be determined on each individual coating of the dried powderized non-skid coating system in accordance with the California Administrative Code, Title 22, the waste extraction test, the soluble metal content, and the total metal content shall not exceed values which would cause the material to be classified as a hazardous waste (see tables VIII and IX). The soluble and total metal content of each individual mixed and cured coating of the non-skid coating system shall be in accordance with the requirements of 3.24.7.

4.10 Performance. When tested as specified in 4.6, the coating system shall meet all the requirements set forth herein as specified in table XIII.

TABLE XIII. Test references.

| Title of test | Performance paragraph | Test paragraph |
|---|---|---|
| Abrasion of arresting cable | 3.3 | 4.6.1 |
| Appearance of the dried coating | 3.4 | 4.6.2 |
| Application properties | 3.5 | 4.6.3 |
| Coefficient of friction | 3.6 | 4.6.4 |
| Color | 3.7 | 4.6.5 |
| Condition in Container | 3.8 | 4.6.6 |
| Coverage | 3.9 | 4.6.7 |
| Drying time | 3.10 | 4.6.8 |
| Fire resistance | 3.11 | 4.6.9 |
| Flash point | 3.12 | 4.6.10 |
| Flexibility (type III) | 3.13 | 4.6.11 |
| Immersion resistance | 3.14 | 4.6.12 |
| Impact resistance | 3.15 | 4.6.13 |
| Pot life | 3.16 | 4.6.14 |
| Resistance to accelerated aging by light and water | 3.17 | 4.6.15 |

TABLE XIII. Test references - Continued.

| Title of test | Performance paragraph | Test paragraph |
|---|---|---|
| Resistance to accelerated corrosion | 3.18 | 4.6.16 |
| Resistance to wear | 3.19 | 4.6.17 |
| Adhesion of the intermediate coat (type III only) | 3.20 | 4.6.18 |
| Storage stability | 3.21 | 4.6.19 |
| Thickness | 3.22 | 4.6.20 |
| Weight | 3.23 | 4.6.20 |
| Toxicity | 3.24.2 | 4.7 |
| VOC | 3.24.6 | 4.8 |
| Soluble and total metal content | 3.24.7 | 4.9 |

4.11 Performance in service. A service test of types I and II shall be conducted on a carrier flight deck in the landing area for composition L and in a non-landing area for composition G. The coating system shall be mixed and applied according to the instructions furnished by the manufacturer (see 3.25). The coating system shall be examined after the test interval specified in table IX for the appropriate type and evaluated for conformance to 3.26. Types III and IV non-skid systems shall be tested on a smaller ship as designated by NAVSEA.

5. PACKAGING

(The packaging requirements specified herein apply only for direct Government acquisition.)

5.1 General.

5.1.1 Performance oriented packaging (POP). Unless otherwise specified (see 6.2), in addition to the packaging requirements specified herein, all packaging shall comply with the United Nations POP requirements.

5.1.2 Navy fire-retardant requirements.

(a) Lumber and plywood. Unless otherwise specified (see 6.2), all lumber and plywood, including veneer materials, used in shipping container and pallet construction, members, blocking bracing and reinforcing shall be fire-retardant treated materials conforming to MIL-L-19140 as follows:

Level A and B - Type II (weather resistant)
Category I (general use)
Level C - Type I (non-weather resistant)
Category I (general Use)

(b) Fiberboard. Fiberboard used in the construction of interior (unit and intermediate) and exterior fiberboard boxes, including packaging forms, shall conform class - domestic/fire-retardant or class - weather resistant/fire-retardant materials requirements of PPP-F-320 as specified (see 6.2).

5.2 Preservation. Preservation shall be level A, C or Commercial as specified (see 6.2).

5.2.1 Unit packs. The coatings shall be furnished in 1, 4 or 19 L (1 quart [qt], 1 or 5 gal) cans or pails as specified (see 6.2). When the coating is composed of two components, it shall be supplied as a kit consisting of base material marked component A and curing agent marked component B. When component A is mixed with component B, the amount of material produced shall equal the size of the kit. Component A shall be furnished in 1 or 4 L (1 qt or 1 gal) cans or pails or in 19 L (5 gal) pails as specified (see 6.2). Component B shall be furnished in cans or pails of the appropriate size, and shall be fastened to the container of container A. Alternatively, components A and B shall be unit packed as a kit in a double-compartmented 23 or 24.5 L (6 or 6-1/2 gal) pails (see 5.2.2.3).

5.2.2 Level A.

5.2.2.1 Cans. Cans shall be in accordance with type V, class 2, of PPP-C-96. An interior coating is required for cans containing water-based coatings. Plan B coating and side seam stripping are required. Wire handles treated to resist corrosion are required for 4 L (1 gal) cans. Can closure shall be in accordance with the appendix to PPP-C-96.

5.2.2.2 Pails. Four and 19 L (1 and 5 gal) pails shall be in accordance with type II, class 3 of PPP-P-704. An interior coating is required for cans containing water-based coatings. All containers shall have an exterior coating. Wire handles treated to resist corrosion are required.

5.2.2.3 Double-compartmented pail. The 23 or 24.5 L (6 or 6-1/2 gal) double-compartmented pail shall be in accordance with type II, class 5 or 11 of PPP-P-704. An interior coating is required for pails containing water-based coatings. All pails shall have an exterior coating. Wire handles or bails treated to resist corrosion are required. The second compartment may be formed using a metal or plastic insert having a tray or saddle shape which is designed to rest over the edge of the pail. The insert shall fit tightly, and shall be of sufficient size to accommodate the unit pack curing agent, component B. The pail, lid, and insert shall fit tightly without leaking. Gaskets may be used if necessary to ensure a leakproof fit.

5.2.3 Level C.

5.2.3.1 Cans. Cans shall be as specified under level A except that exterior plan A coating shall apply.

5.2.3.2 Pails. Pails shall be as specified under level A.

5.2.4 Commercial. The coating in quantity specified (see 5.2.1) shall be unit packed in containers (see 5.1.1) in accordance with ASTM D 3951 (see 5.1.1).

5.3 Packing. Packing shall be levels A, B, C, or commercial as specified (see 6.2).

5.3.1 Level A.

5.3.1.1 Cans. Cans shall be arranged and packed in wood, plywood or wirebound containers, at the supplier's option, in accordance with the level A requirements of the appendix to PPP-C-96.

5.3.1.2 Pails. Pails shall be packed in accordance with the appendix to PPP-P-704.

5.3.2 Level B.

5.3.2.1 Cans. Cans shall be packed in accordance with the level A requirements of the appendix to PPP-C-96, except that the wood, plywood and wirebound boxes shall be of the domestic type or class. Fiberboard shall be of the fire-retardant weather-resistant class (see 5.1.2) and boxes shall be provided with fiberboard top and bottom pads. Fiberboard box closure shall be in accordance with Method V and reinforced with tape or non-metallic banding.

5.3.2.2 Pails. Pails shall be packed in accordance with the appendix to PPP-P-704.

5.3.3 Level C.

5.3.3.1 Cans. Cans shall be packed in accordance with level B requirements of the appendix to PPP-C-96. Fiberboard shall be of the class - domestic/fire-retardant [see 5.1.2 (b)]. Fiberboard box closure shall be in accordance with Method I using pressure sensitive adhesive tape.

5.3.3.2 Pails. Pails shall be packed in accordance with the appendix to PPP-P-704.

5.3.4 Commercial. Commercial packing shall be in accordance with the requirements of ASTM D 3951.

5.4 Marking.

5.4.1 Levels A, B, C and Commercial. In addition to any special marking required (see 3.5, 6.2 and herein), shipping containers and palletized unit loads shall be marked in accordance with MIL-STD-129, the applicable container specification and appendix thereto, and shall include bar coding. Commercial marking shall be in accordance with the requirements of ASTM D 3951, including bar coding.

5.4.1.1 Colors of labels. The major bold lettering on all labels shall be red on a white background for composition G, and blue on a white background for composition L.

5.4.1.2 Special marking. Each container of single-component coatings and each component container of two-component coatings shall be marked with the following additional information:

(a) Number and date of this specification.
(b) Type and composition of non-skid topcoat.
(c) Manufacturer's name and the address of the manufacturing location.
(d) Manufacturer's QPL designation, lot number, and date of manufacture.
(e) Contract number.
(f) Color name and number from FED-STD-595.

5.4.1.3 Additional markings. In addition to other requirements, containers shall bear the following markings:

(a) Each component container of two-component materials shall bear the following marking: "CAUTION: This is one component of a two component system which WILL NOT HARDEN unless both components are mixed together."
(b) Containers of composition G coatings shall bear the following marking on the container and on the lid: "DO NOT USE IN CARRIER LANDING AREAS."
(c) Containers shall bear the following markings:

(1) "INSTRUCTIONS FOR USE: Refer to the contractor's written instructions for mixing and application before beginning work."
(2) "CAUTION: Avoid skin contact during application. Ingredients may cause irritation or skin sensitization. In case of contact, wash skin thoroughly with soap and water."
(3) "This coating has a 1-year nonextendable shelf life and shall not be used after (insert the month and year which are one year later than the date of manufacture)."

(d) Containers shall also be marked as follows: "Contains a maximum of INSERT PROPER NUMBER HERE pounds per gallon (INSERT PROPER NUMBER HERE grams per liter) of volatile organic content (VOC) per 40 CFR Ch. 1, Part 60, Appendix A, (U.S. EPA) method 24."
(e) Containers shall also be marked as follows: "Product shall be used as a system. The product system consist of INSERT PROPER MFG PRIMER, INTERMEDIATE COAT (IF REQUIRED), NON-SKID TOP COAT, AND COLOR TOPPING HERE."
(f) Type III coatings shall be marked as follows: "To use this product an industrial hygienist must be present at all times during the product application and Naval Environmental Health Center Guidance must be strictly followed."

5.5 Material safety data sheet (MSDS). For shipping containers and palletized unit loads, a copy of the FED-STD-313 MSDS shall be attached to each unit of issue and to the shipping document for each destination.

5.6 Repair kits. Repair kits shall consist of two size units, as follows:

5.6.1 Ten gallon kit shall be packed (see 5.2) as a single unit consisting of: (a) sufficient non-skid coating components in double compartmented pails (see 5.1.4) to make 10 gal (mixed) of non-skid coating and (b) sufficient quantity of 1 gal cans and 1 quart (qt) cans of primer and any required intermediate coatings to cover an equivalent surface area covered by 10 gal of non-skid coating.

5.6.2 Five gallon kit shall be packed (see 5.2) as a single unit consisting of (a) sufficient non-skid coating components in 1 gal piggy back cans (see 5.1.2) to make 5 gal (mixed) of non-skid coating and (b) sufficient quantity of 1 gal piggyback cans and 1 quart (qt) cans of primer and any required intermediate coatings for each to cover an equivalent surface area covered by 5 gal of non-skid coating.

5.7 Toxicity. A copy of Navy Environmental Health Center findings shall be attached to the shipping document for each destination.

5.8 Appearance of the dried topcoat. A sample of the non-skid topcoat shall be packaged with each shipment of material for each destination.

6. NOTES

(This section contains information of a general or explanatory nature that may be helpful, but is not mandatory.)

6.1 Intended use. The coatings covered by this specification are intended for use on general (walking) deck areas (types I, II, III, and IV composition G), the flight and hangar decks of aircraft carriers (types I and II, compositions G and L) and on the landing decks of air-capable amphibious aviation and aviation ships (types I, II and type III, composition G). Type I provides longer durability than type II, however the factor of increased weight should be considered when using this system. Type III non-skid systems are intended for use only on wood decks or where flexibility or thick smoothing capability is needed to correct drainage. Type III is not intended to be used on aircraft carriers if the underlayment is used due to compressibility of the materials under heavy aircraft. Type IV can be used on walking surfaces, but is not intended for aircraft landing decks. Although laboratory testing is done between 10°C (50°F) and 32°C (90°F), each individual coating of these coating systems is applied in the fleet between 4°C (40°F) and 49°C (120°F). The test outline in section 4 are only for qualification purposes except the service test.

6.2 Acquisition requirements. Acquisition documents must specify the following:

(a) Title, number, and date of this specification.
(b) Type and composition required (see 1.2).
(c) Issue of DoDISS to be cited in the solicitation, and if required, the specific issue of individual documents referenced (see 2.1.1 and 2.2).
(d) Color required (see 3.7).
(e) When POP requirements are not required (see 5.1.1).
(f) When fire-retardant lumber and plywood are not required [see 5.1.2 (a)].

(g) Class of fire-retardant fiberboard required [see 5.1.2 (b)].
(h) Level of preservation and level of packing required (see 5.2 and 5.3).
(i) Size of container required (see 5.2.1).
(j) Required marking (see 5.4.1).
(k) Data sheets required (see 6.8).

6.3 Consideration of data requirements. The following data requirements should be considered when this specification is applied on a contract. The applicable Data Item Descriptions (DID's) should be reviewed in conjunction with the specific acquisition to ensure that only essential data are requested/provided and that the DID's are tailored to reflect the requirements of the specific acquisition. To ensure correct contractual application of the data requirements, a Contract Data Requirements List (DD Form 1423) must be prepared to obtain the data, except where DoD FAR Supplement 27.475-1 exempts the requirement for a DD Form 1423.

| Reference Paragraph | DID Number | DID Title | Suggested Tailoring |
|---|---|---|---|
| 4.2.1 | DI-MISC-80678 | Certification/data report | ---- |

The above DID's were those cleared as of the date of this specification. The current issue of DoD 5010.12-L, Acquisition Management Systems and Data Requirements Control List (AMSDL), must be researched to ensure that only current, cleared DID's are cited on the DD Form 1423.

6.4 Qualification. With respect to products requiring qualification, awards will be made only for products which are, at the time of award of contract, qualified for inclusion in Qualified Products List QPL No. 24667 whether or not such products have actually been so listed by that date. The attention of the contractors is called to these requirements, and manufacturers are urged to arrange to have the products that they propose to offer to the Federal Government tested for qualification in order that they may be eligible to be awarded contracts or purchase orders for the products covered by this specification. The activity responsible for the Qualified Products List is the Naval Sea Systems Command, SEA 5122, Department of the Navy, 2531 National Center Bldg 3, Washington, DC 20362-5160 and information pertaining to qualification of products may be obtained from that activity. Application for qualification tests must be made in accordance with "Provisions Governing Qualification SD-6" (see 6.4.1).

6.4.1 Copies of "Provisions Governing Qualification SD-6" may be obtained upon application to the Standardization Documents Order Desk, Bldg. 4D, 700 Robbins Avenue, Philadelphia, PA 19111-5094.

6.5 Shelf life. For the cataloging, logistics, and storage functions of Federal acquisition and supply agencies, materials acquired under this specification shall be assigned a 1-year non-extendable shelf life (shelf life code H) beginning in the date of manufacture.

6.6 Verification tests. Verification tests may be performed and will consist of any tests determined by NAVSEA to be necessary to ensure that the material offered for delivery is the same as the material originally submitted for qualification under this specification. The Government reserves the right to perform inspections and tests not contained in this specification in order to determine that the requirements in section 3 are satisfied, and that the raw materials used in the manufacture of the material offered for delivery are the same as the raw material used in the manufacture of the qualification sample.

6.7 In addition to the requirements specified in 4.2.1, the certification data/report should include the following information:

(a) Certification that the submitted coating system does not contain toxic materials, or esters or ethers derived from ethylene glycol in excess of 0.06% by weight of the dry paint as specified in 3.24.2, 3.24.3, 3.24.4, and 3.24.5.
(b) Certification that the submitted coating system has a 1 year storage stability at the time of delivery to the contracting officer as specified in 3.21.
(c) Material safety data sheet as specified in 3.24.1.
(d) Test report showing that the submitted material conforms to all requirements of this specification as specified in 4.4.3.
(e) Directions for mixing and applying the system as specified in 3.25.
(f) Certification that the submitted coating system meets the volatile organic content (VOC) requirement of 3.24.6.
(g) A copy of Navy Environmental Health Center findings in 3.24.2.

6.8 FED-STD-313 Material safety data (MSDS), ASTM F 718 data sheets and Navy Environmental Health Center Findings. Contracting officers will identify those activities requiring copies of completed MSDS and ASTM F 718 data sheets (see 3.24.1, 3.25 and 3.24.2). In order to obtain the MSDS, FAR Clause 52.223 must be in the contract. The pertinent Government mailing addresses for submission of data are in FED-STD-313.

6.9 Inspection System Requirements. The nature of this commodity requires the contractor or non-skid supplier to have an established inspection system in his facility prior to and during production of commodities procured to this specification. The contracting officer shall state in the body of the contract or purchase order a requirement that the contractor shall have established and continue to maintain an inspection system in accordance with MIL-I-45208 prior to contract award.

6.10 Supersession data. This specification supersedes MIL-D-23003A(SH) 25 February 1980 and MIL-D-24483A(SHIPS) dated 19 August 1974, as follows:

| MIL-C-24667(NAVY) | MIL-D-23003A(SH) | MIL-D-24883A |
|---|---|---|
| Type I, composition G | ----- | ----- |
| Type I, composition L | ----- | ----- |
| Type II, composition G | Type III | ----- |
| Type II, composition L | Type IV | ----- |
| Type III | ------ | ----- |
| Type IV | ----- | Type I |
| ------ | Type I | ----- |
| ------ | Type II | ----- |
| ------ | ----- | Type II |

6.11 Subject term (key word) listing.

Coating
Color Topping
Non-skid
Nonslip
Paint
Topcoat

6.12 Changes to previous issue. Marginal notations are not used in this revision to identify changes with respect to the previous issue due to the extensiveness of the changes.

Reviewing activity:
Navy - AS

Preparing activity:
Navy - SH
(Project 8010-N196)

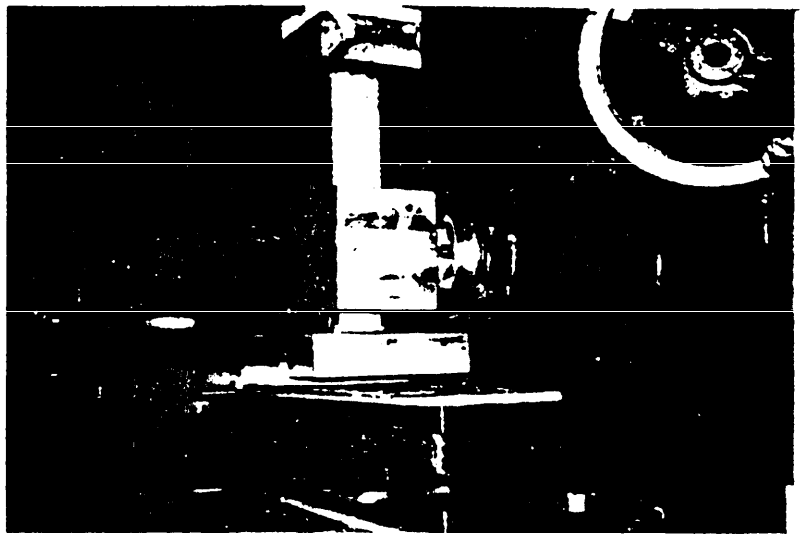

SH 13036

FIGURE 1. View of the NRL wire abrasion tester.

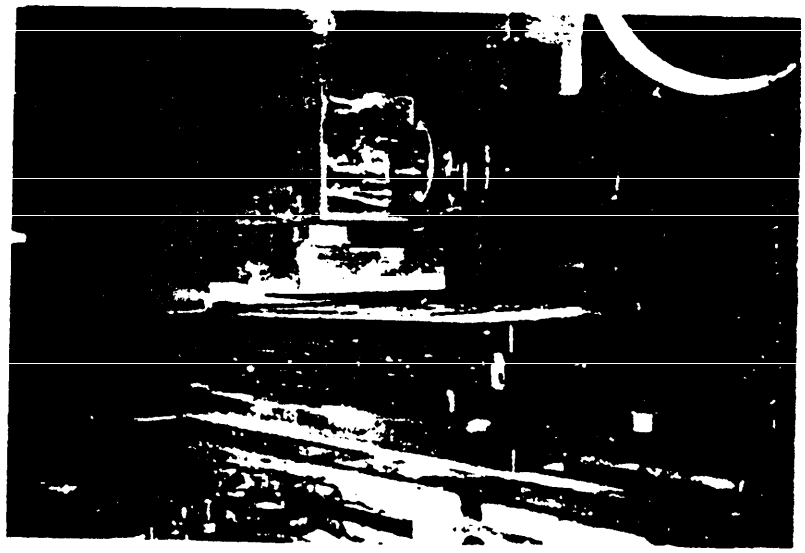

SH 13037

FIGURE 2. Closeup view of the NRL wire abrasion tester.

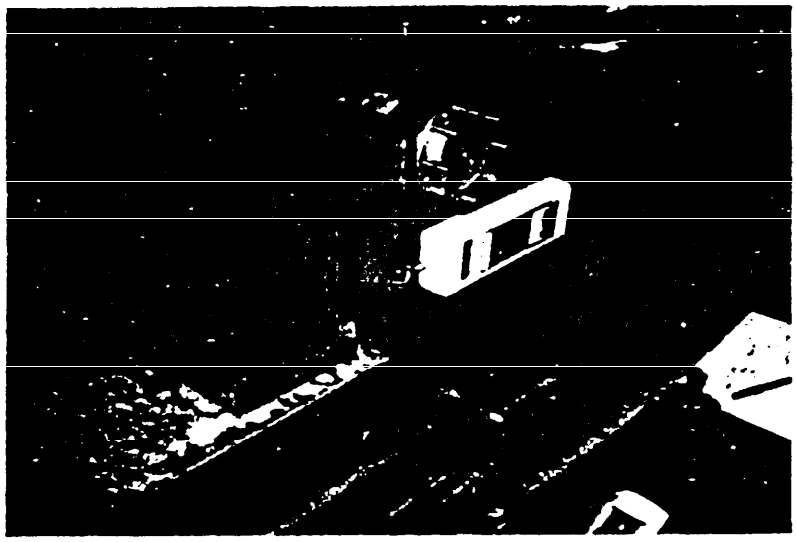

SH 13038

FIGURE 3. View of the coefficient of friction test, showing the NAVSSES slipmeter resting on a panel of nonskid coating.

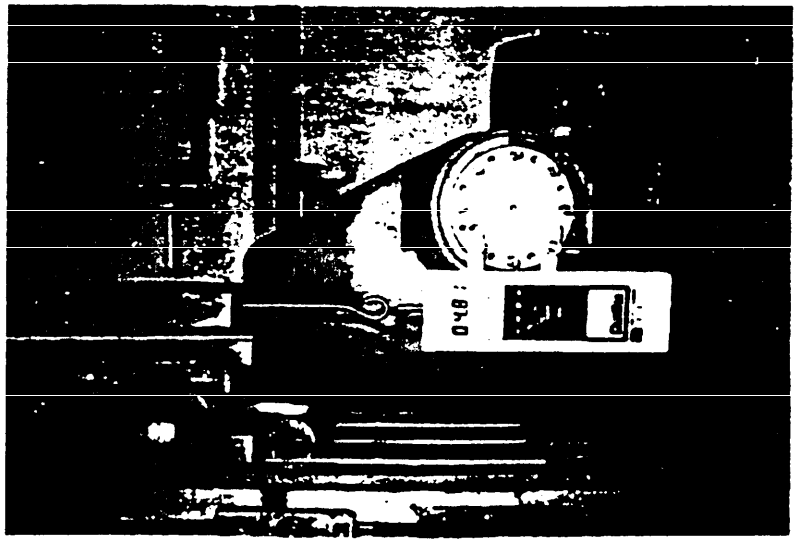

SH 13039

FIGURE 4. View of the coefficient of friction test, showing the direct reading electronic force gauge.

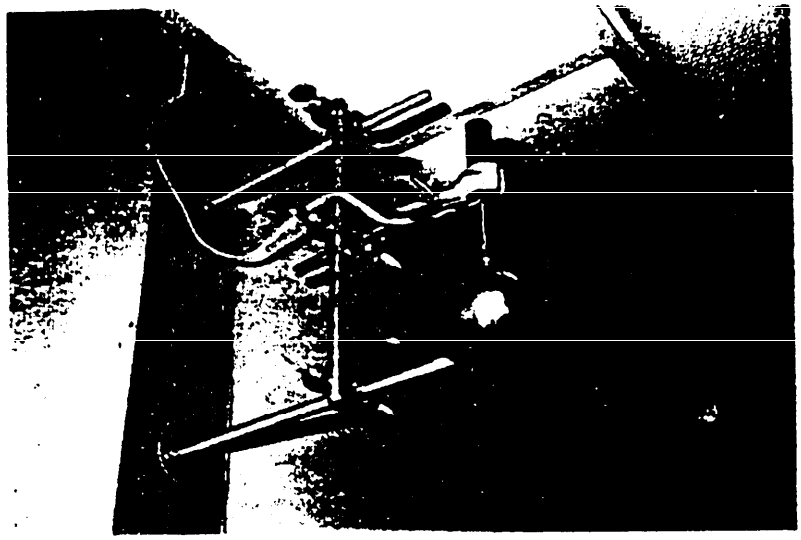

SH 13040

FIGURE 5. - Electromagnet with a centering tip with the 2-pound steel ball used for the impact resistance test.

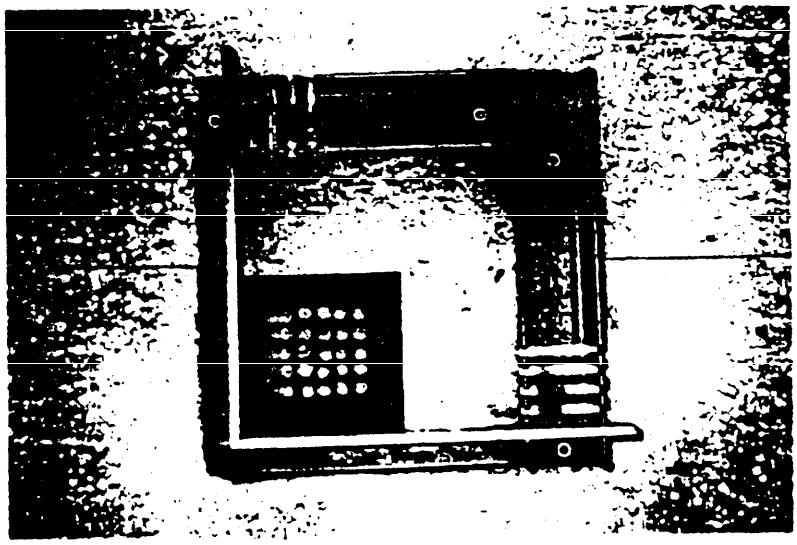

SH 13041

FIGURE 6. The solid steel base, 2-inches thick, used for the impact resistance test, and the guides used to position the panel for successive impacts.

| | | | | |
|---|---|---|---|---|
| 2 | 15 | 11 | 7 | 3 |
| 6 | 19 | 23 | 20 | 16 |
| 10 | 22 | 25 | 24 | 12 |
| 14 | 18 | 21 | 17 | 8 |
| 1 | 5 | 9 | 13 | 4 |

FIGURE 7. The sequence in which 25 successive impacts are made during the impact resistance test.

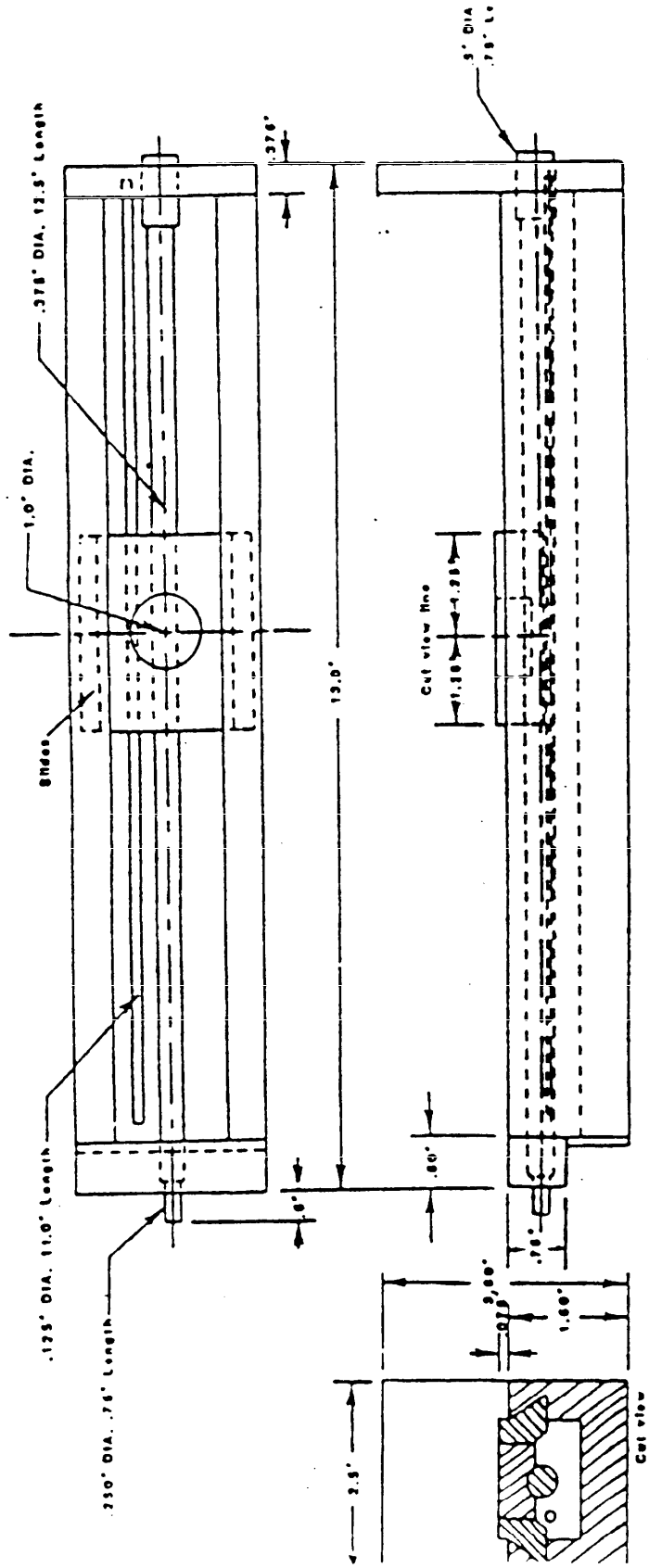


FIGURE 8. Unislide.

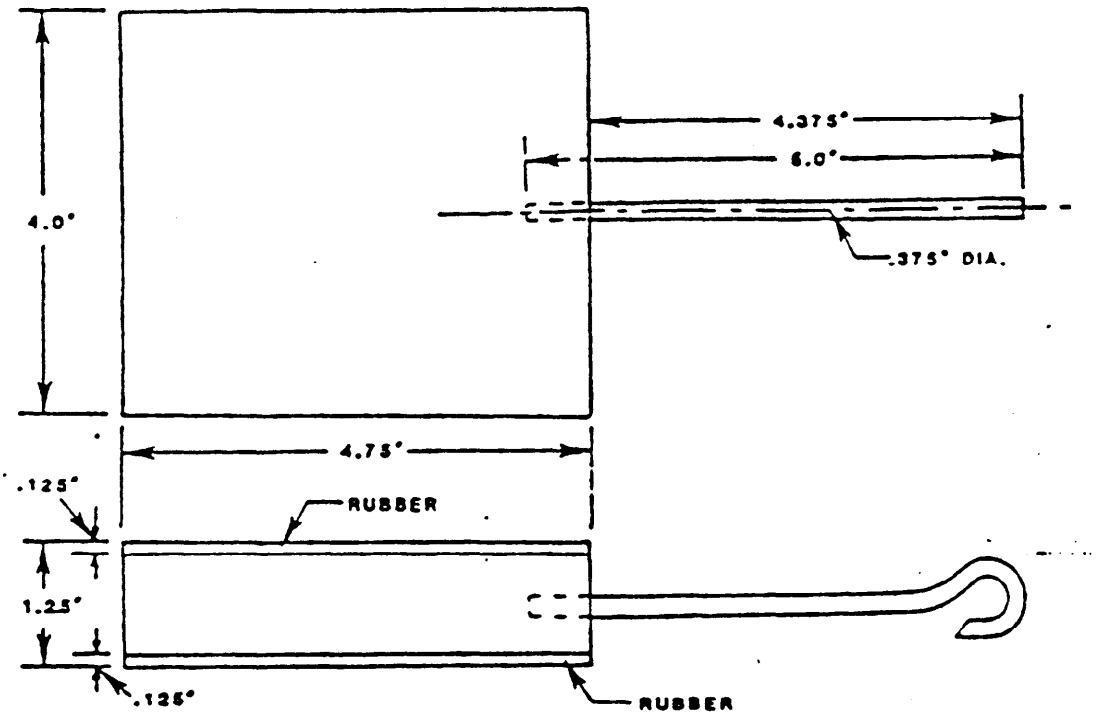


FIGURE 9. Slide test block.

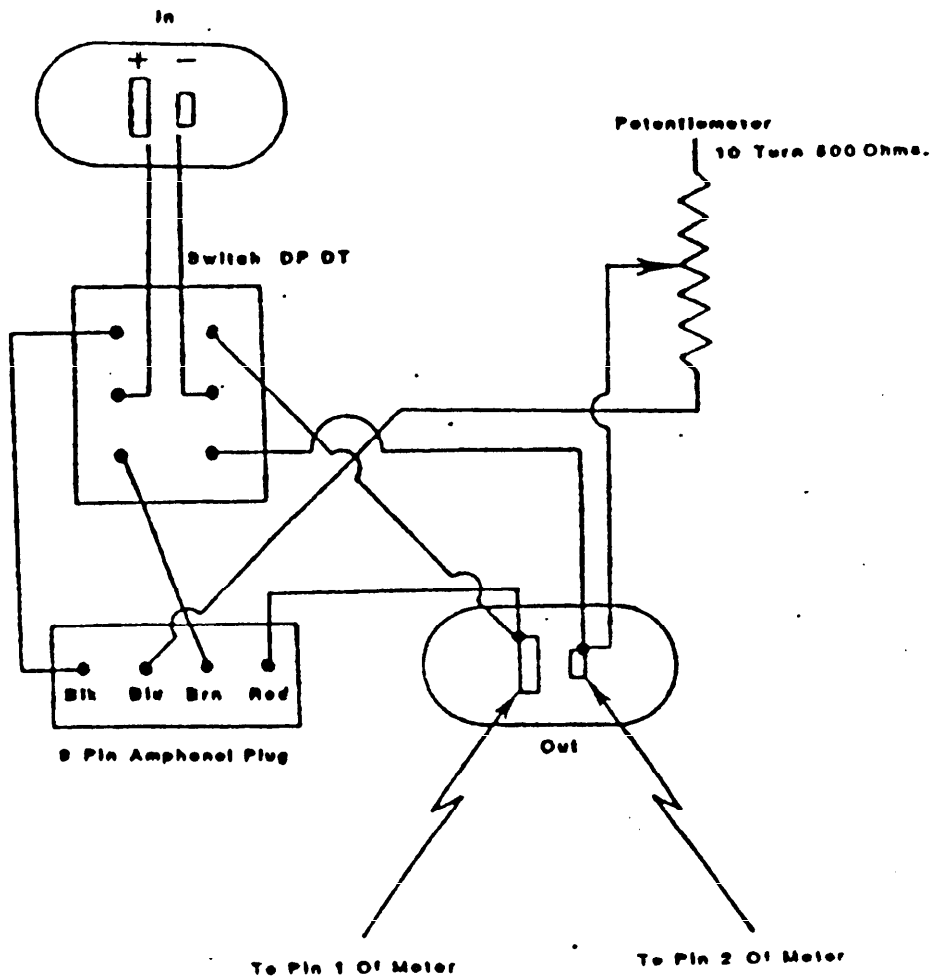


FIGURE 10. Coefficient of friction controller wiring diagram.

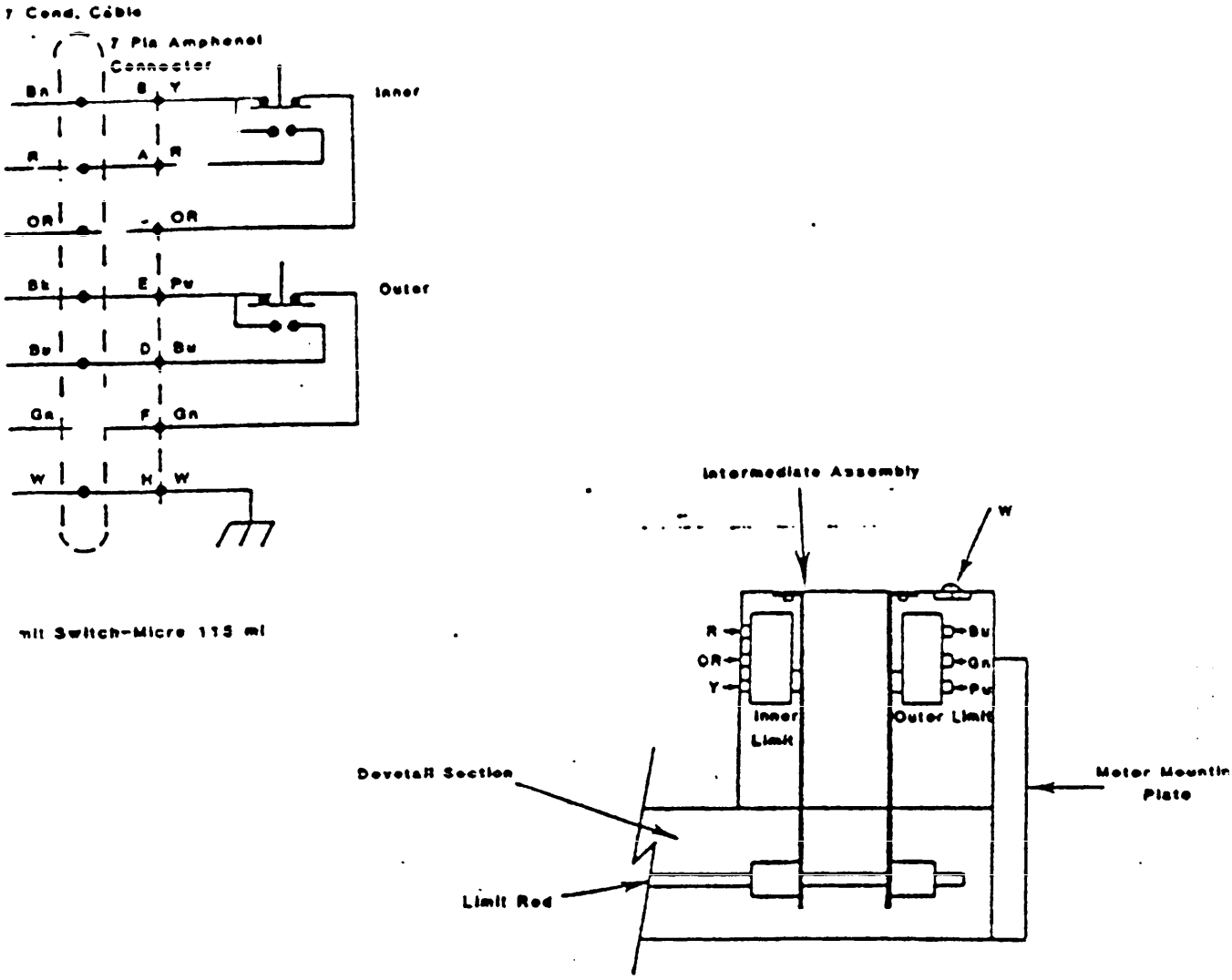


FIGURE 11. Coefficient of friction tester limit switch wiring diagram.

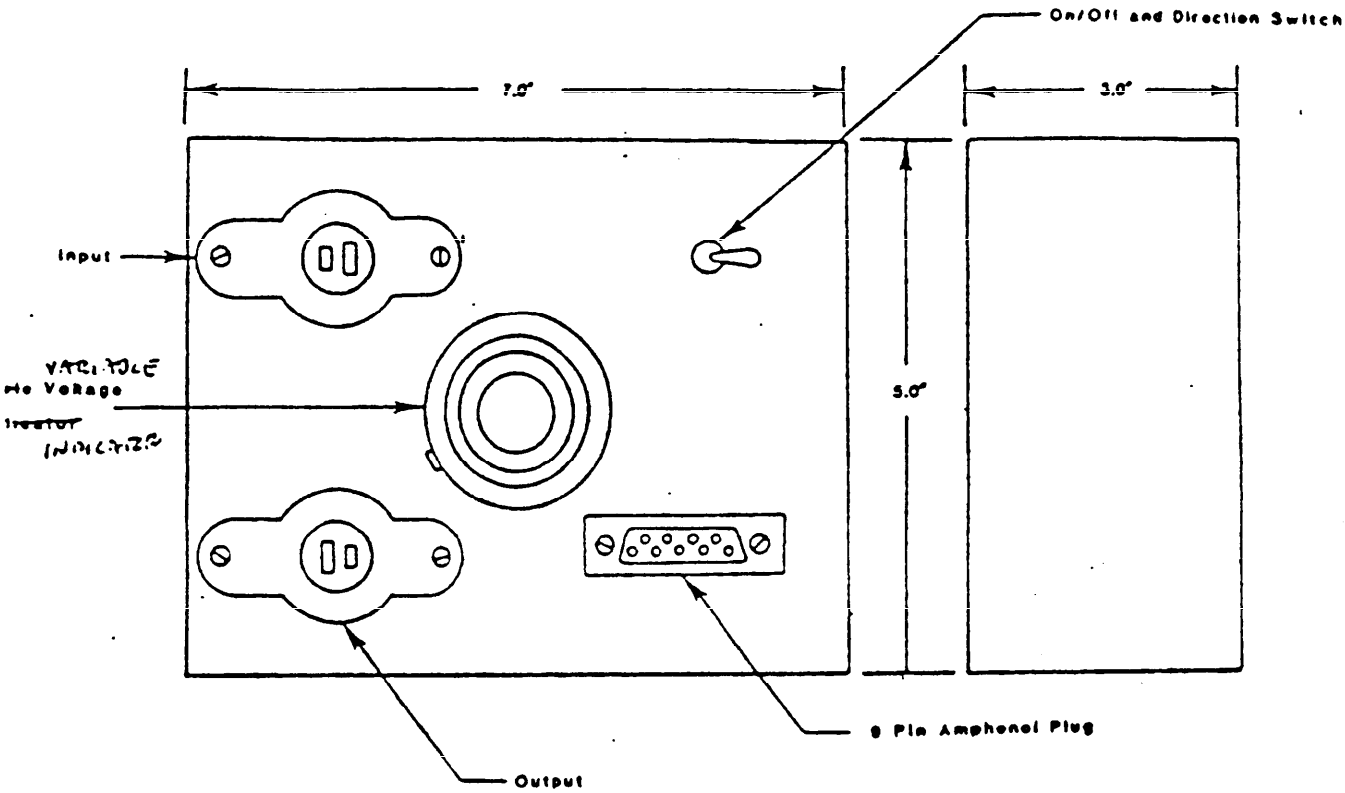


FIGURE 12. Coefficient of friction voltage regulator.

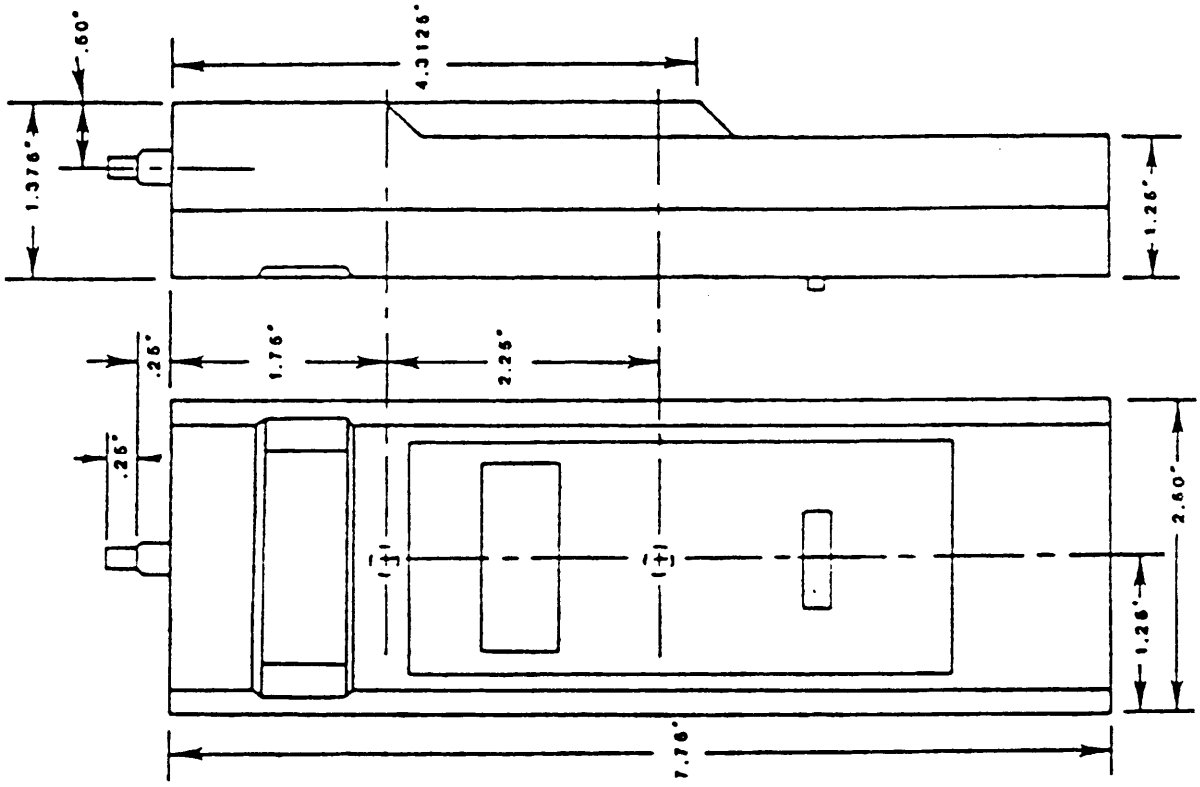


FIGURE 13. Dimensions of digital force gauge.

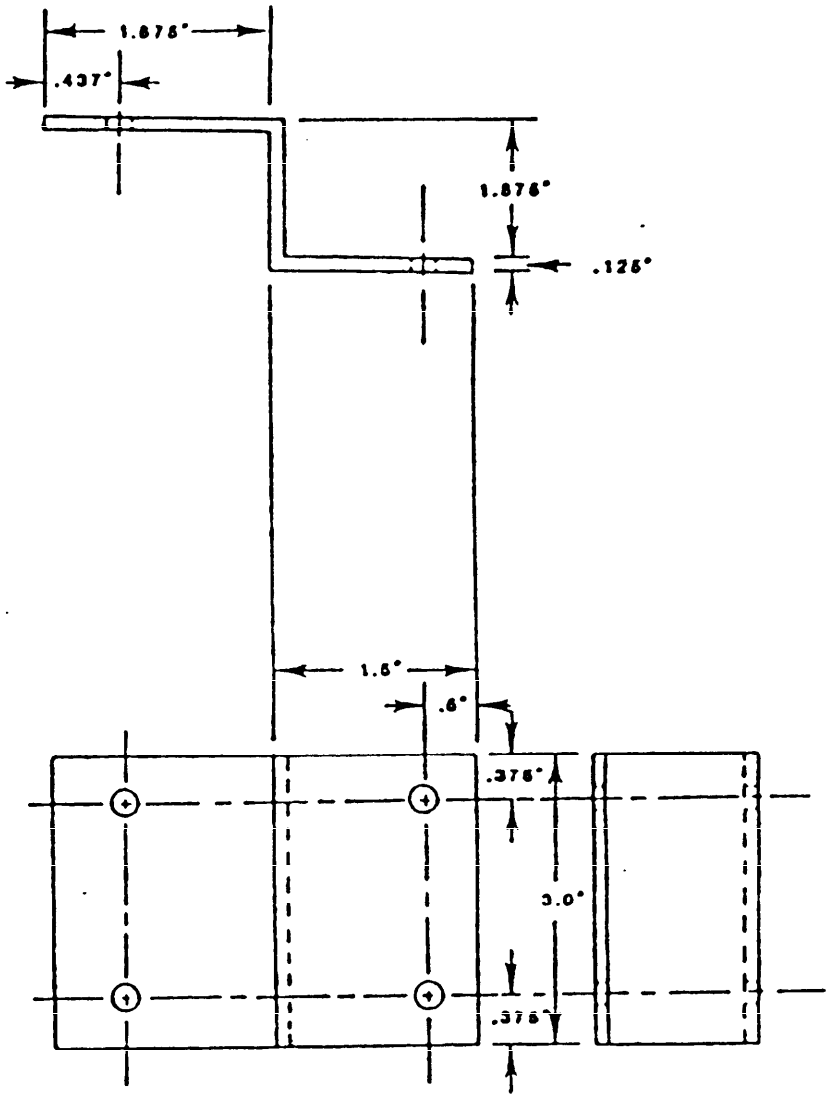


FIGURE 14. Digital force gauge mounting bracket.

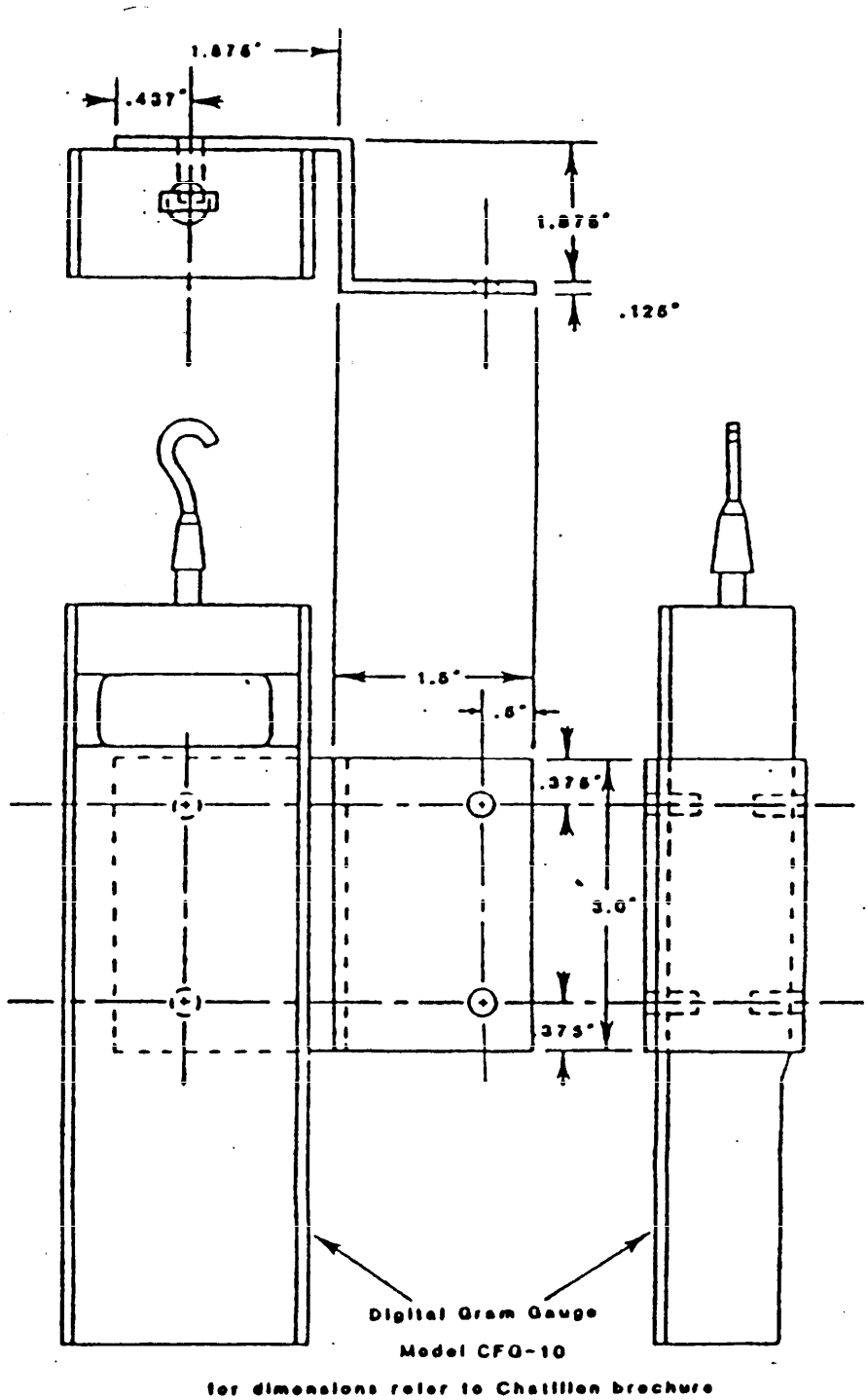


FIGURE 15. Mounting of digital force gauge.

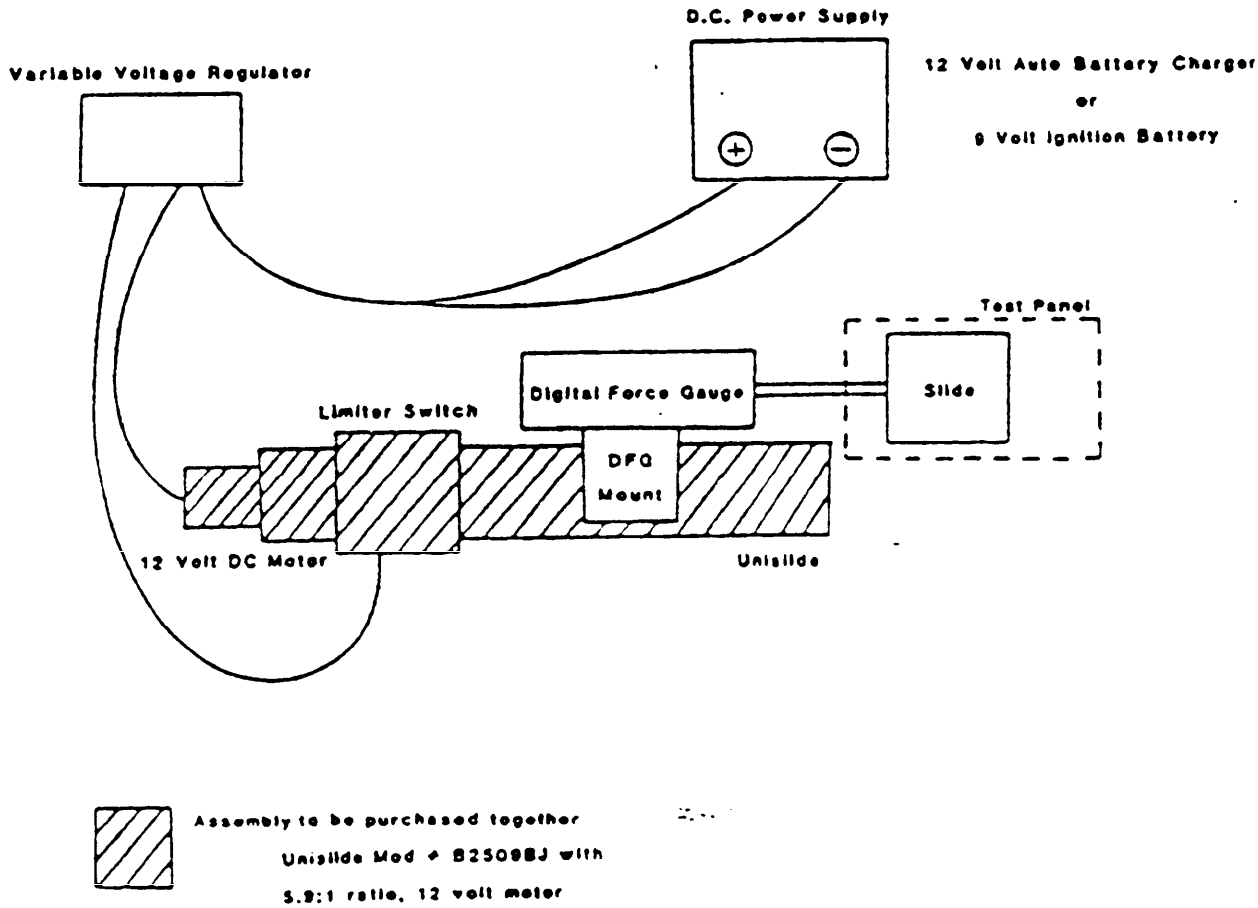


FIGURE 16. Coefficient of friction test setup.

# STANDARDIZATION DOCUMENT IMPROVEMENT PROPOSAL

## INSTRUCTIONS

1. The preparing activity must complete blocks 1, 2, 3, and 8. In block 1, both the document number and revision letter should be given.
2. The submitter of this form must complete blocks 4, 5, 6, and 7.
3. The preparing activity must provide a reply within 30 days from receipt of the form.

NOTE: This form may not be used to request copies of documents, nor to request waivers, or clarification of requirements on current contracts. Comments submitted on this form do not constitute or imply authorization to waive any portion of the referenced document(s) or to amend contractual requirements.

| I RECOMMEND A CHANGE: | 1. DOCUMENT NUMBER | 2. DOCUMENT DATE (YYMMDD) |
|---|---|---|
| | MIL-C-24667A(SH) | 14 August 1992 |

3. DOCUMENT TITLE
Coating System Non-Skid For Foll Or Spray Application (Metric)

4. NATURE OF CHANGE (Identify paragraph number and include proposed rewrite, if possible. Attach extra sheets as needed.)

5. REASON FOR RECOMMENDATION

6. SUBMITTER

| a. NAME (Last, First, Middle Initial) | b. ORGANIZATION | |
|---|---|---|
| c. ADDRESS (Include Zip Code) | d. TELEPHONE (Include Area Code)<br>(1) Commercial<br>(2) AUTOVON (If applicable) | 7. DATE SUBMITTED (YYMMDD) |

8. PREPARING ACTIVITY

| a. NAME | b. TELEPHONE (Include Area Code) | |
|---|---|---|
| Technical Point of Contact:<br>Dale Sowell, SEA 51412, | (1) Commercial<br>703-602-0215 | (2) AUTOVON<br>332-0215 |
| c. ADDRESS (Include Zip Code)<br>NAVAL SEA SYSTEMS COMMAND<br>SEA 05Q42<br>2531 National Center Building 3<br>Washington, D.C. 20362-5160 | IF YOU DO NOT RECEIVE A REPLY WITHIN 45 DAYS, CONTACT:<br>Defense Quality and Standardization Office<br>5203 Leesburg Pike, Suite 1403, Falls Church, VA 22041-3466<br>Telephone (703) 756-2340 AUTOVON 289-2340 | |